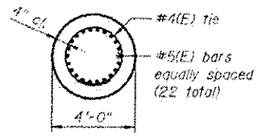


SECTION E-E

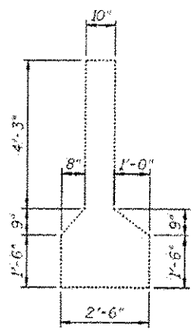


SECTION A-A

(Dimensions shown are approximate and shall be verified by contractor, see Note 4.)

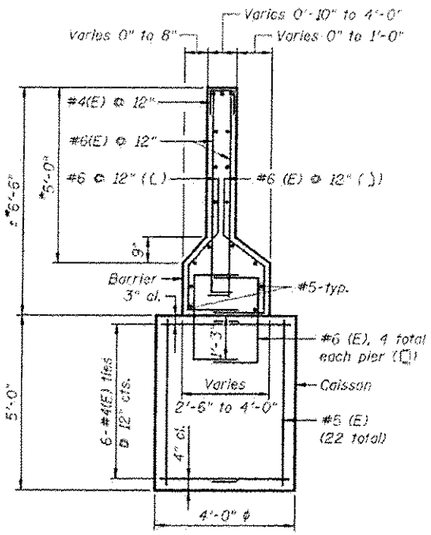


SECTION B-B

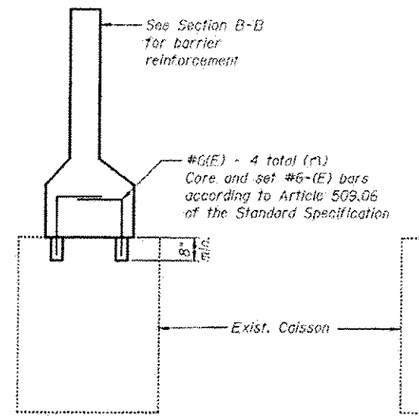


SECTION C-C

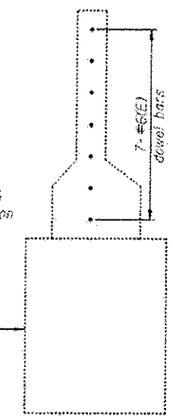


SECTION D-D

Notes:

1. Costs for demolition of the concrete barrier wall shall be included with "Barrier Wall Removal" and shall include, but not limited to, braced excavation, concrete removal, Caisson removal etc. that is necessary for the completion of the work.
2. Costs for construction of the new concrete barrier wall shall be included with "Concrete Barrier Wall (Special)" and shall include, but not limited to, reinforcement, concrete, drilling and grouting dowel bars, caisson construction etc. that is necessary for the completion of the work.
3. Reinforcement bars designated (E) shall be epoxy coated.
4. The Contractor shall field verify existing dimensions and details affecting new construction and make necessary approved adjustments prior to construction or ordering of materials. Contractor shall submit a detailed plan & proposed layout for approval of the Engineer before ordering material.
5. Existing reinforcement shall be cleaned and incorporated into the new construction as appropriate. Cost included with "Concrete Barrier Wall (Special)".
6. Any damage done to the existing barrier or barrier caisson to be reused shall be repaired by the Contractor. Cost included with "Barrier Wall Removal".
7. Contractor shall submit shop drawings for the removal and replacement of the barrier wall showing all existing & proposed dimensions and tapers, as well as all reinforcement details. Costs are included with "Concrete Barrier Wall (Special)".
8. Existing concrete surface in contact with new concrete shall be roughened to a minimum amplitude of ¼" and a bonding agent mixture applied before pouring new concrete. Costs included with "Concrete Barrier Wall (Special)."
9. Taper length for the barrier shall meet 30:1 minimum taper rate.
10. Edge of barrier base shall match existing top of shoulder at existing ground line elevations.

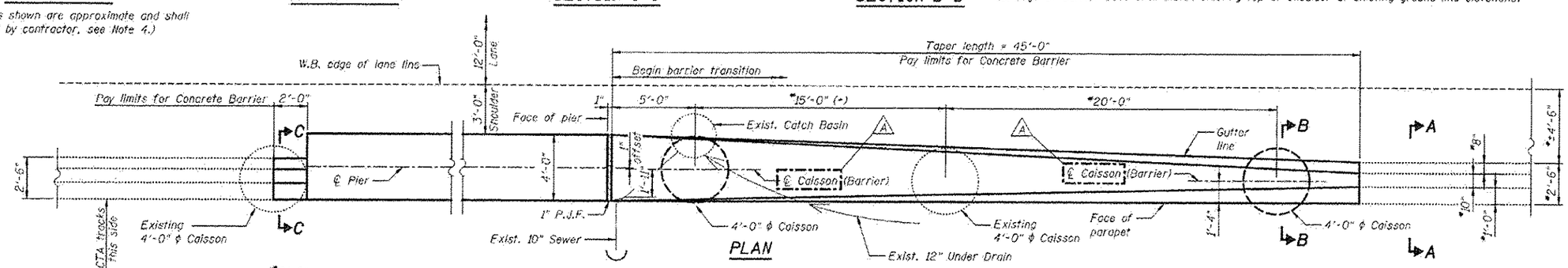


PLAN

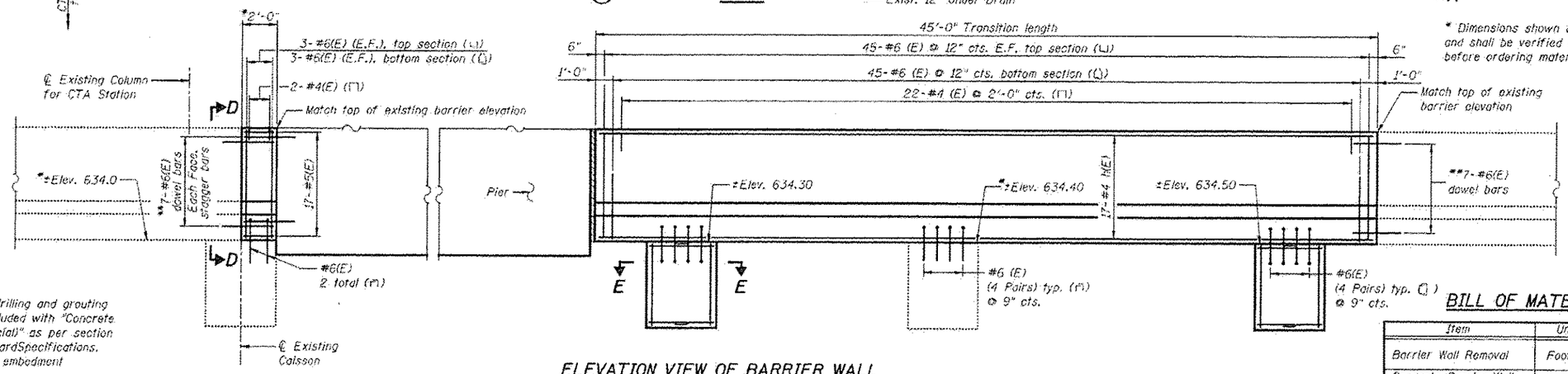


ELEVATION VIEW OF BARRIER WALL

* Dimensions shown are approximate and shall be verified by the Contractor before ordering material.

** The cost of drilling and grouting dowel bars is included with "Concrete Barrier Wall (Special)" as per section 584 of the StandardSpecifications. Minimum depth of embedment equals 8".

## BILL OF MATERIAL

| Item | Unit | Total |
|---|---|---|
| Barrier Wall Removal | Foot | 185.0 |
| Concrete Barrier Wall (Special) | Foot | 47.0 |

| | | | |
|---|---|---|---|
| PATRICK ENGINEERING INC. 4670 VARSITY DRIVE LISLE, IL 60532 patrickengineering.com | USER NAME = | DESIGNED - RDW | REVISED 4/1/2013 AY |
| | | DRAWN - DM | REVISED |
| | PLOT SCALE = | CHECKED - RLD | REVISED |
| | PLOT DATE = | DATE - 2/18/2013 | REVISED |

STATE OF ILLINOIS
DEPARTMENT OF TRANSPORTATION

BARRIER WALL
STRUCTURE NO. 016-1250

SCALE: NONE | SHEET NO. S43 OF S59 SHEETS

| F.A.U RTE. | SECTION | COUNTY | TOTAL SHEETS | SHEET NO. |
|---|---|---|---|---|
| 2746 | 16162 | COOK | 404 | 312 |

CONTRACT NO. 60J14

ILLINOIS FED. AID PROJECT