STATE OF ILLINOIS
DEPARTMENT OF TRANSPORTATION

ROUTE NO.	SECTION	COUNTY	TOTAL SHEETS	SHEET NO.
		Cook	17	7
FED. ROAD DIST. NO. 2		ILLINOIS	FED. AID PROJECT-	

SHEET NO. 2
5 SHEETS

Contract Number: 62870

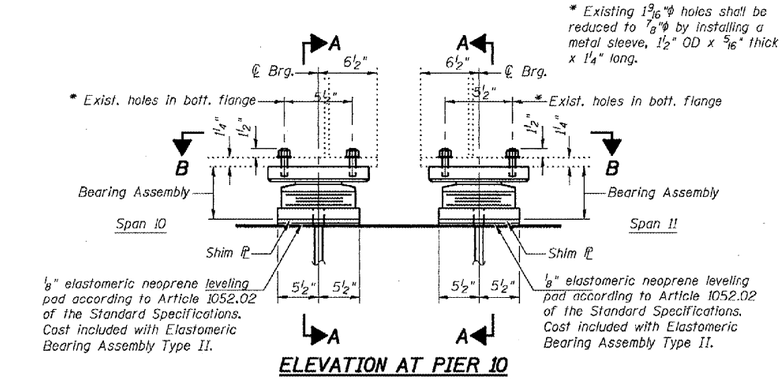

ELEVATION AT PIER 10

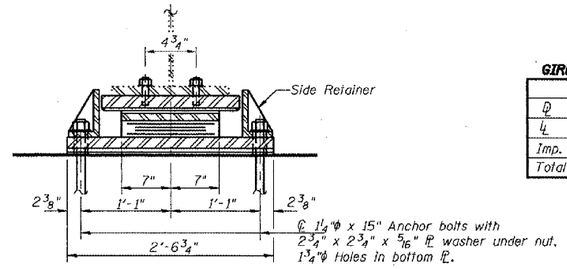

SECTION A-A

TYPE II ELASTOMERIC EXP. BRG.

GIRDER REACTIONS AT PIER 10

		S. Brg.	N. Brg.
D	(k)	49.3	49.7
L	(k)	40.8	41.9
Imp.	(k)	9.7	9.3
Total	(k)	99.8	100.9

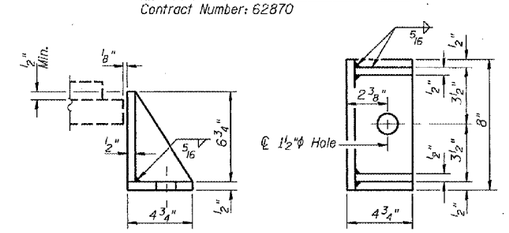

SIDE RETAINER

Equivalent rolled angle with stiffeners will be allowed in lieu of welded plates.

Notes:
New side retainers, shim ℙs, connection bolts and anchor bolts are included in Furnishing and Erecting Structural Steel.
See sheet 3 of 5 for anchor bolt installation.
Prior to ordering any material, the contractor shall verify, in the field, all bearing height and shim thickness dimensions.
Min. jack capacity = 75 Tons.

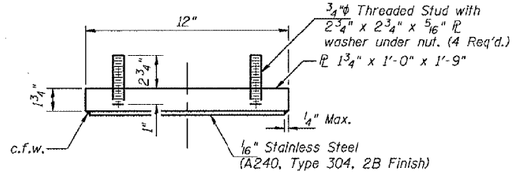

TOP BEARING ASSEMBLY

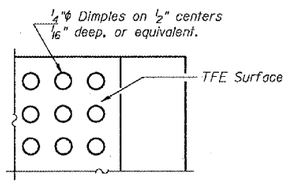

PLAN-TFE SURFACE

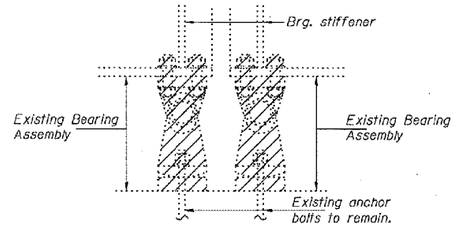

EXISTING BEARING REMOVAL DETAIL

Cost included with Jacking and Cribbing.

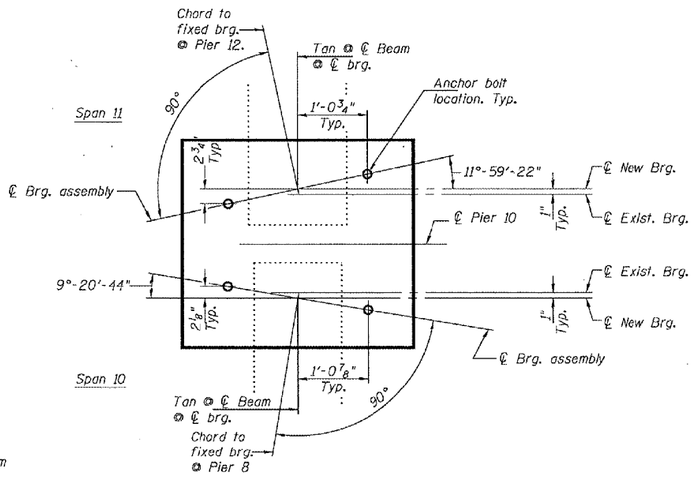

BEARING ORIENTATION

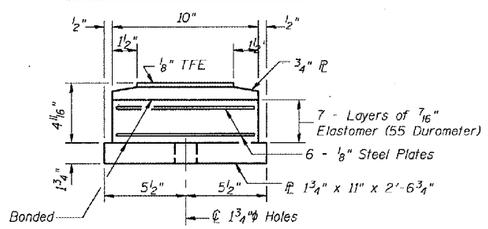

BOTTOM BEARING ASSEMBLY

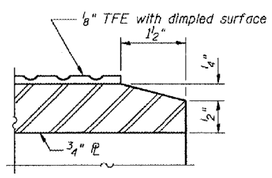

SECTION THRU TFE

Notes:
The 1/8" TFE sheet shall be bonded directly to the top steel plate with a two-component, medium viscosity epoxy resin, conforming to the requirements of the Federal Specification MMM-A-134, Type I. The bond agent shall be applied on the full area of the contact surfaces.

Bonding of 1/8" TFE sheet during vulcanizing process will be permitted provided the process and method of adjusting assembly height is approved by the Engineer.

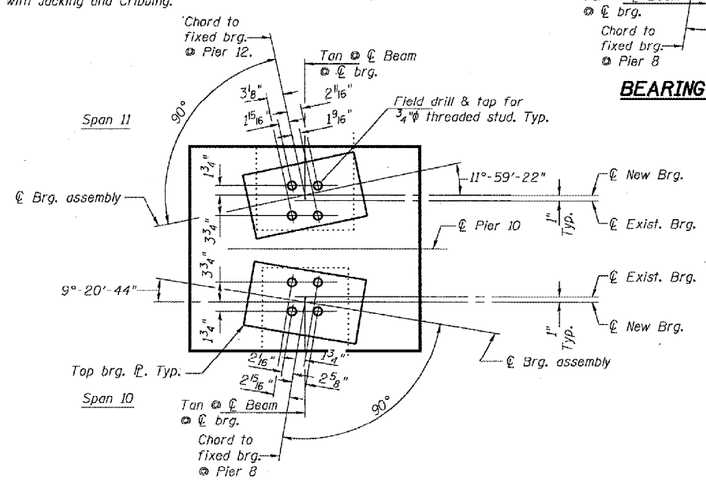

VIEW B-B

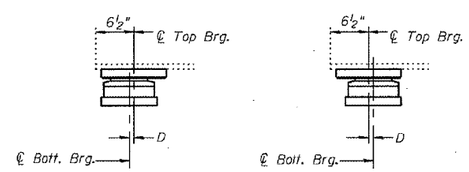

BELOW 50°F. (Move bott. brg. away from fixed brg.)

ABOVE 50°F. (Move bott. brg. toward fixed brg.)

SETTING ANCHOR BOLTS AT EXP. BRG.

D=1/8" per each 100' of expansion for every 15° temp. change from the normal temp. of 50°F.

BILL OF MATERIAL

Item	Unit	Total
Elastomeric Bearing Assembly Type II	Each	8
Jacking and Cribbing	LS	1
Furnishing and Erecting Structural Steel.	Lbs.	610

BEARING DETAILS
LOC 2: STONEY ISLAND CONNECTOR
TO FAI 94 RAMP Q STRUCTURE
COOK COUNTY
SN 016-2437

DESIGNED	JSB	
CHECKED	ATH	
DRAWN	baliva	
CHECKED	JSB	ATH

I-2-E2 9-1-03

MARCH 20, 2005
EXAMINED John A. Morris ENGINEER OF STRUCTURAL SERVICES
PASSED Ralph E. Anderson ENGINEER OF BRIDGES AND STRUCTURES

...\projects\dab00036\0162437.dgn 3/21/2005 8:05:08 AM

S:\1072\05_CADD\Structural\SN 0162437-60J12-083-FY28.dgn 12/7/2012 2:27:46 PM