WORK SHALL MEET THE REQUIREMENTS OF THE SPECIAL PROVISION, "**TRAFFIC SIGNAL SPECIFICATIONS FOR DETECTOR LOOP REPLACEMENT AND/OR INSTALLATION ON ROADWAY GRINDING, RESURFACING AND PATCHING OPERATIONS**". SPECIAL ATTENTION MUST BE MADE TO THE SECTIONS "**INSPECTION OF CONSTRUCTION**" AND "**DETECTOR LOOP REPLACEMENT**" FOR INSTALLATION AND INSPECTION REQUIREMENTS. LOOP REPLACEMENT WORK THAT DOES NOT MEET THE CONTRACT REQUIREMENTS **SHALL NOT BE PAID.** WORK NECESSARY TO COMPLETE THE LOOP REPLACEMENT WORK MAY BE ASSIGNED BY THE ENGINEER TO IDOT'S ELECTRICAL MAINTENANCE CONTRACTOR (EMC); ALL RELATED COSTS WILL BE THE RESPONSIBILITY OF THE CONTRACTOR.

TRAFFIC SIGNAL LEGEND

	PROPOSED	EXISTING
SIGNAL HEAD WITH BACKPLATE		
SIGNAL HEAD		
GALVANIZED STEEL CONDUIT IN TRENCH OR PUSHED		
DETECTOR LOOP		
VEHICLE DETECTOR, NON COMPENSATED MAGNETIC TYPE		
RACEWAY FOR MAGNETIC DETECTOR, TYPE I OR TYPE II		"E"

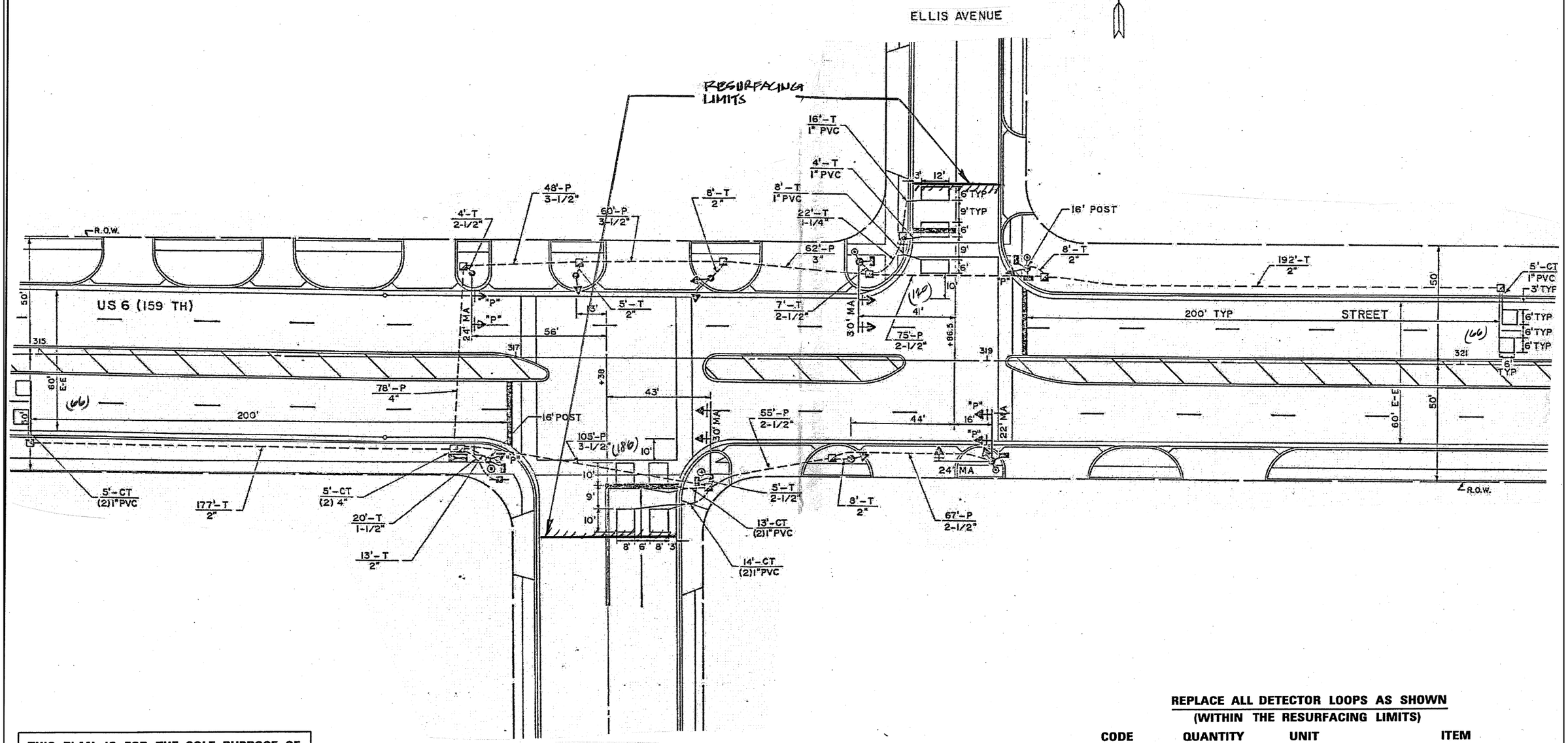

THIS PLAN IS FOR THE SOLE PURPOSE OF DETECTOR LOOP REPLACEMENTS ONLY

REPLACE ALL DETECTOR LOOPS AS SHOWN
(WITHIN THE RESURFACING LIMITS)

CODE	QUANTITY	UNIT	ITEM
88600600	438	FOOT	DETECTOR LOOP, REPLACEMENT

FILE NAME = c:\pw_work\pwidot\bigataoao\d0331360\D119913-sht-plan.dgn	USER NAME = bigataoao	DESIGNED -	REVISED -
	PLOT SCALE = 100.0000 ' / in.	DRAWN -	REVISED -
$MODELNAME$	PLOT DATE = 2/8/2013	CHECKED -	REVISED -
		DATE -	REVISED -

STATE OF ILLINOIS
DEPARTMENT OF TRANSPORTATION

DISTRICT ONE - DETECTOR LOOP REPLACEMENT
U.S. ROUTE 6 AND ELLIS AVENUE

SCALE: SHEET OF SHEETS STA. TO STA.

F.A.P RTE.	SECTION	COUNTY	TOTAL SHEETS	SHEET NO.
351	(539&3339)_RS-1	COOK	32	18
		CONTRACT NO. 60W17		
		ILLINOIS FED. AID PROJECT		