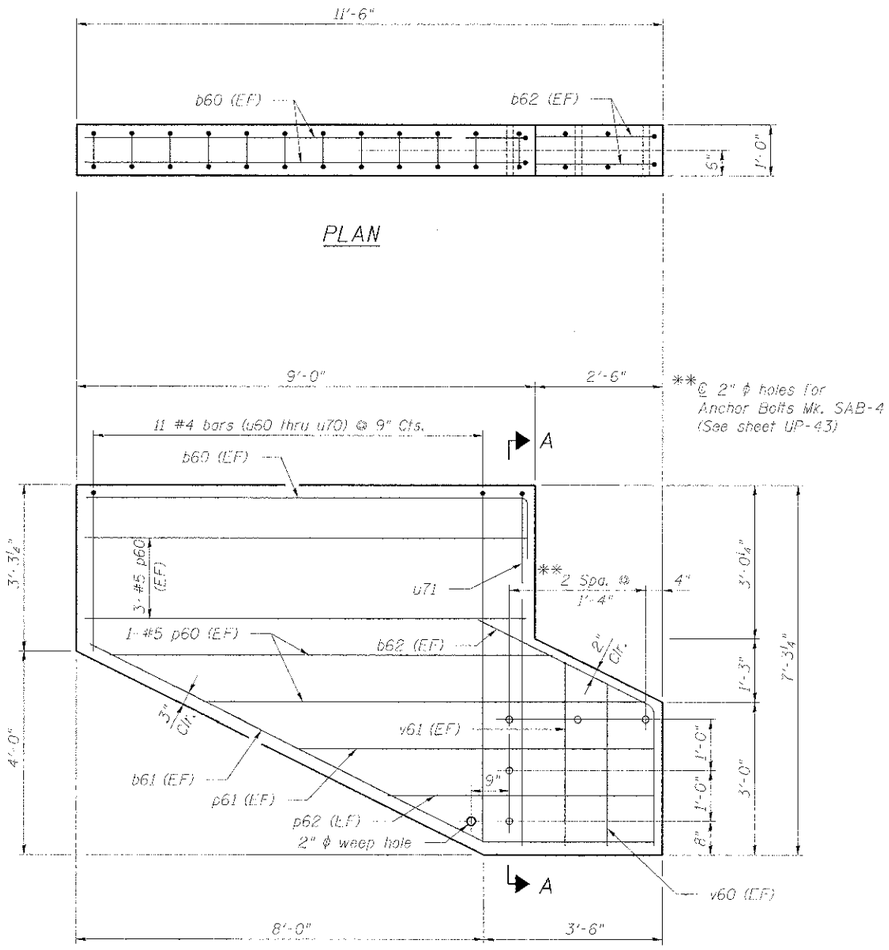

PRECAST WINGWALL MK. WW-1
(Estimated Wt. = 4.5 Tons)

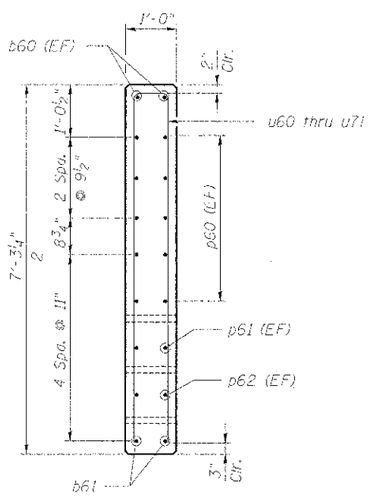

SECTION A-A

Bar	A
u60	3'-0"
u61	3'-4½"
u62	3'-9"
u63	4'-1½"
u64	4'-6"
u65	4'-10½"
u66	5'-3"
u67	5'-7½"
u68	6'-0"
u69	6'-4½"
u70	6'-9"
u71	6'-10"

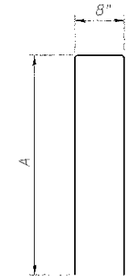

BARS u60 thru u71

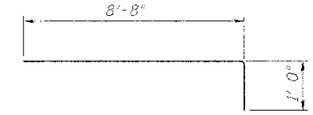

BAR b60

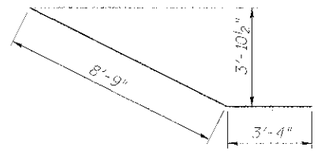

BAR b61

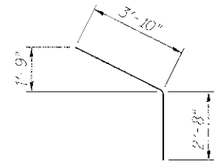

BAR b62

FOR ONE MK. WW-1

Bar	No.	Size	Length	Shape
b60	2	#4	9'-8"	
b61	2	#4	12'-1"	
b62	2	#4	6'-6"	
p60	10	#4	8'-8"	
p61	2	#4	7'-3"	
p62	2	#4	5'-5"	
u60	1	#4	6'-8"	
u61	1	#4	7'-5"	
u62	1	#4	8'-2"	
u63	1	#4	8'-11"	
u64	1	#4	9'-8"	
u65	1	#4	10'-5"	
u66	1	#4	11'-2"	
u67	1	#4	11'-11"	
u68	1	#4	12'-8"	
u69	1	#4	13'-5"	
u70	1	#4	14'-2"	
u71	1	#4	14'-4"	
v60	2	#4	3'-0"	
v61	2	#4	3'-6"	
Precast Concrete Structures			Cu. Yd.	2.2
Reinforcement Bars			Pound	210

All bar dimensions shown are out to out of bars.

BILL OF MATERIAL*

ITEM	UNIT	TOTAL
Precast Wingwall Mk. WW-1	Ea.	4
Reinforcing Steel (Per Schedule, this sheet)	Lot	4

*For Information Only. Items are included in cost of "Temporary Bridge".

NOTES:

1. The Fabricator will be responsible for the design of the Lifting Loops or Lift Anchors for the Erection of the Precast members. Required details to be coordinated with the Contractor and approved by the Engineer.
2. E.F. denotes Each Face.

benesch
engineers · scientists · planners
Alfred Benesch & Company
205 North Michigan Avenue, Suite 2400
Chicago, Illinois 60601
312-565-0450 Job No. 10074

FILE NAME = Temp.Br.011.Wing.Wall.dgn	USER NAME = rgraham	DESIGNED - JLS	REVISED -
		CHECKED - LRB	REVISED -
	PLOT SCALE =	DRAWN - RMG	REVISED -
	PLOT DATE = 12/13/2012	CHECKED - LRB	REVISED -

STATE OF ILLINOIS
DEPARTMENT OF TRANSPORTATION

M.P. 37.71 BELVIDERE SUBDIVISION – TEMPORARY BRIDGE
PRECAST END BENT WINGWALL DETAILS

SHEET NO. UP-44 OF UP-52 SHEETS

F.A.P. RTE.	SECTION	COUNTY	TOTAL SHEETS	SHEET NO.
361	C6-00214-18-RP	KANE	451	304
		CONTRACT NO. 63598		
		ILLINOIS FED. AID PROJECT		

X:\10000S\10074\Engineering_Documents_Phase_II\SN_045_3168_UPRR_Bridge\PLANS\Temp_Br_011_Wing_Wall.dgn
3:13:03 PM
12/13/2012