Notes:
Pour steps monolithically with cap.
Space reinforcement in cap to miss anchor bolts.

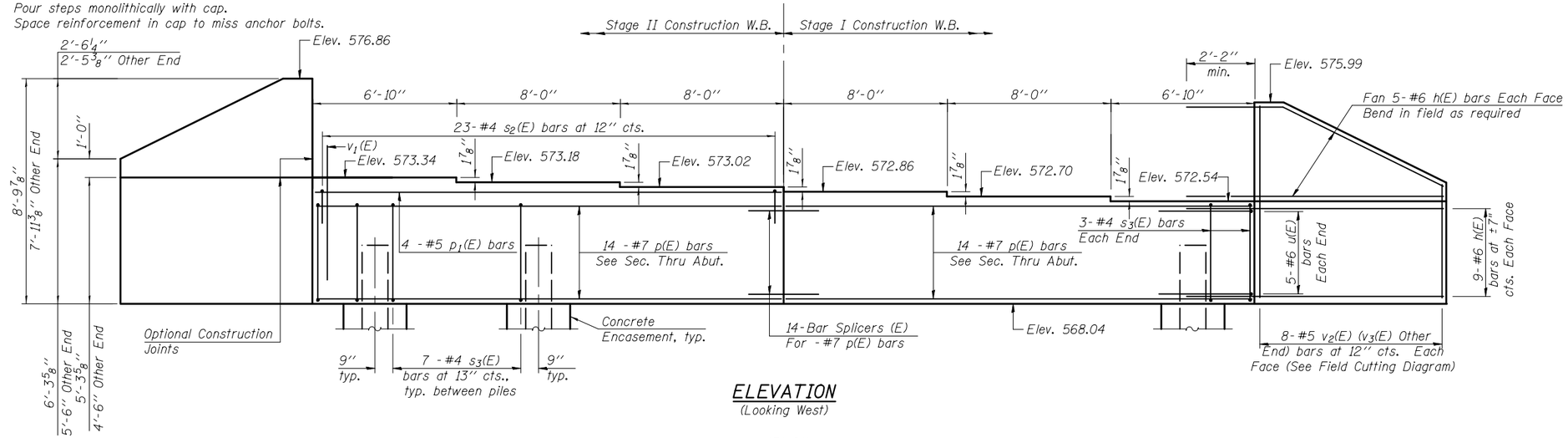

ELEVATION
(Looking West)

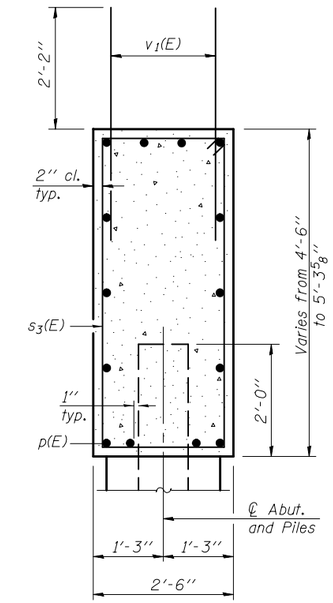

SEC. THRU ABUT.

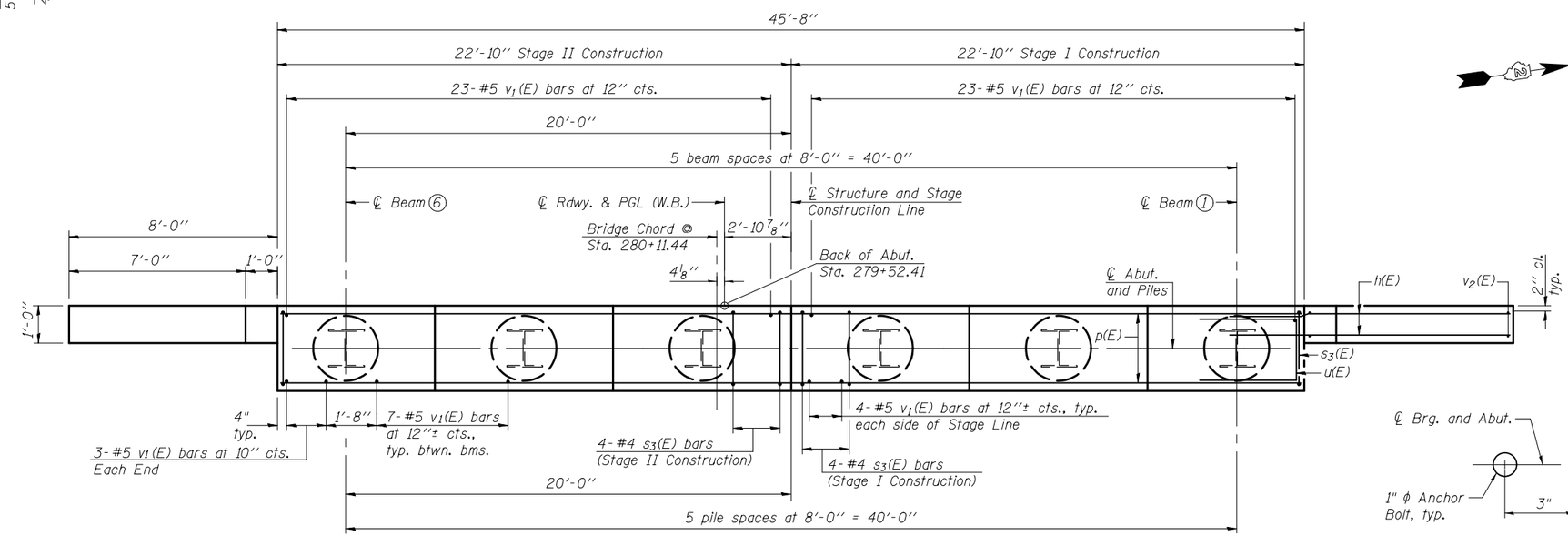

PLAN

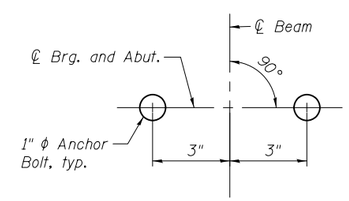

ANCHOR BOLT LOCATION DETAIL

BILL OF MATERIAL

Bar	No.	Size	Length	Shape
h(E)	56	#6	10'-6"	
p(E)	28	#7	22'-6"	
p1 (E)	4	#5	22'-6"	
s2(E)	23	#4	6'-2"	
s3(E)	42	#4	13'-6"	
u(E)	10	#6	9'-9"	
v1(E)	88	#5	4'-4"	
v2(E)	16	#5	14'-4"	
v3(E)	16	#5	12'-9"	
Structure Excavation			Cu. Yd.	132
Concrete Structures			Cu. Yd.	25.0
Reinforcement Bars, Epoxy Coated			Pound	3,740
Furnishing Steel Piles, HP10x42			Foot	80
Driving Piles			Foot	80
Test Pile Steel HP10x42			Each	1
Concrete Encasement			Cu. Yd.	2.1
Pile Shoes			Each	6

For details of Bar Splicers, see sheet 33 of 38.
For details of piles and Concrete Encasement, see sheet 32 of 38.
For drainage details, see sheet 2 of 38.

PILE DATA

Type: Steel HP 10x42 with Pile Shoes
Nominal Required Bearing: 335 kip
Factored Resistance Available: 184 kip
Est. Length: 16 ft
No. Production Piles: 5
No. Test Piles: 1

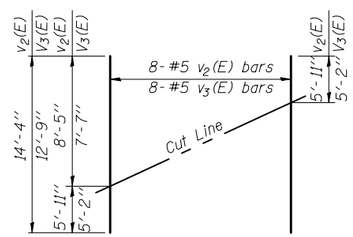

FIELD CUTTING DIAGRAM
Order v2(E) and v3(E) full length. Cut as shown and use remainder of bars in opposite face.

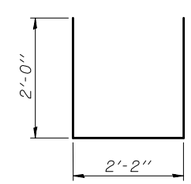

BAR s2(E)

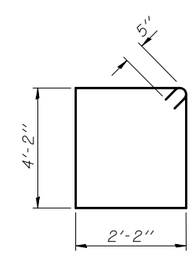

BAR s3(E)

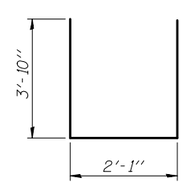

BAR u(E)

Wight

	DESIGNED - MAS	REVISED -	
	CHECKED - MWS	REVISED -	
	DRAWN - TAY	REVISED -	
PLOT DATE = 3/19/2013	CHECKED - MAS	REVISED -	

STATE OF ILLINOIS
DEPARTMENT OF TRANSPORTATION

WEST ABUTMENT
STRUCTURE NO. 081-0195 (W.B.)
SHEET NO. 24 OF 38 SHEETS

F.A.I. RTE.	SECTION	COUNTY	TOTAL SHEETS	SHEET NO.
74/280	81-3BR	ROCK ISLAND	290	187
		CONTRACT NO. 64D23		
		ILLINOIS FED. AID PROJECT		

3/19/2013 2:42:05 PM 0818194.64D23.024.Abut.01.dgn