EXISTING TYPICAL SECTION F.A.I. 39

STA. 377 + 00.00 TO STA. 511 + 11.00

STATION EQUATION

STA. 377 + 24.54 (BK.) =
STA. 377 + 00.00 (AH.)

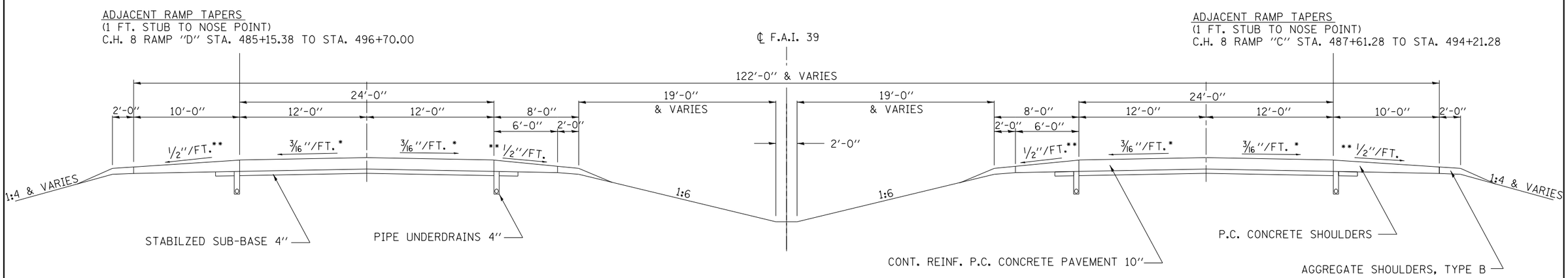

* SLOPE VARIES FOR SUPERELEVATION IN CURVES

** SLOPE VARIES IN SUPERELEVATION WITH MAXIMUM OF 0.08 FT/FT DIFFERENCE

FILE NAME =	USER NAME = kedasar	DESIGNED -	REVISED -	STATE OF ILLINOIS DEPARTMENT OF TRANSPORTATION	EXISTING TYPICAL CROSS SECTIONS	F.A.I. RTE.	SECTION	COUNTY	TOTAL SHEETS	SHEET NO.
c:\pw_work\pwidot\kedasar\d0329897\D570980-sht-plans.dgn		DRAWN -	REVISED -			39	D5 PATCHING 2013-4	McLEAN	19	9
	PLOT SCALE = 40.0000 ' / in.	CHECKED -	REVISED -							
$MODELNAME$	PLOT DATE = 1/24/2013	DATE -	REVISED -		SCALE: SHEET 4 OF 5 SHEETS STA. TO STA.		ILLINOIS	FED. AID PROJECT		