NOTES

1. FURNISH AND INSTALL A #6 AWG (MIN.) BARE SOLID COPPER COUNTERPOISE CONDUCTOR APPROXIMATELY 10" ABOVE THE DUCT BANK FOR THE FAA REILS CIRCUIT. COUNTERPOISE SHALL BE BONDED TO GROUND RODS A T APPROXIMATELY 90' INTERVALS AND AT THE DUCT BANK TERMINATIONS JUST OUTSIDE OF THE MANHOLES. GROUND RODS SHALL BE 3/4" DIA. X 10' LONG UL LISTED COPPERCLAD. THE SPACING OF GROUND RODS SHALL VARY BY 10% TO 20% TO PREVENT RESONANCE. INSTALL GROUND RODS 6 FEET ON EITHER SIDE OF THE TRENCH. ALL BELOW GRADE CONNECTIONS TO GROUND RODS AND COUNTERPOISE SHALL BE EXOTHERMIC WELD.
2. CONNECTIONS TO GROUND RODS SHALL BE EXOTHERMIC WELD TYPE CONNECTIONS; CADWELD, THERMOWELD, ULTRAWELD, OR APPROVED EQUAL.
3. TURF RESTORATION SHALL BE INCIDENTAL TO THE RESPECTIVE CABLE, DUCT, HANDHOLE, MANHOLE, AIRFIELD LIGHT FIXTURES, OR OTHER RESPECTIVE WORK ITEM INSTALLATION FOR WHICH IT IS NECESSARY.

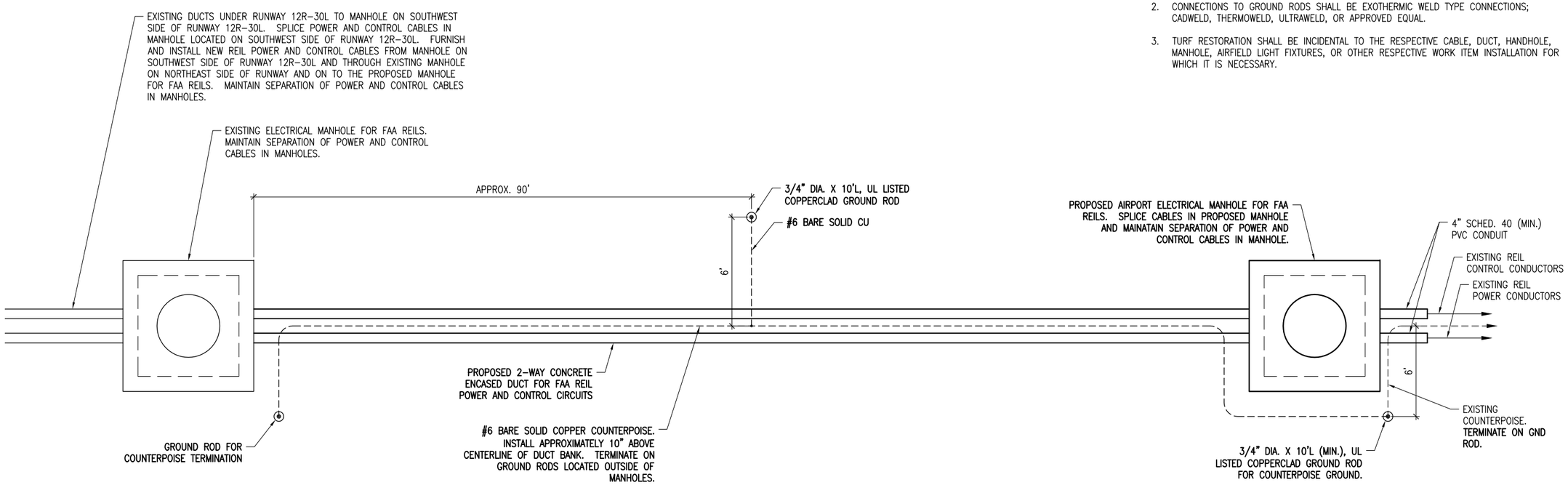

COUNTERPOISE PLAN FOR FAA REIL CIRCUITS

"NOT TO SCALE"

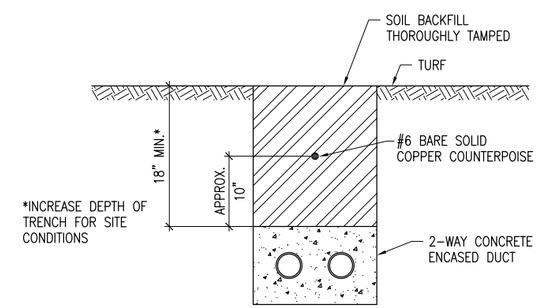

COUNTERPOISE ELEVATION

NOT TO SCALE

REVISION	DATE

SAINT LOUIS DOWNTOWN AIRPORT
A Division of Bi-State Development Agency
IL PROJ.: CPS-4210 BLOCK GRANT PROJ.: 3-17-0039-B29

Hanson Project No. 11A0190
Filename E-505-DTL.dwg
Scale NOT TO SCALE
Date 03/08/13

LAYOUT	KNL	02/17/13
DRAWN	MLH	02/18/13
REVIEWED	BSS	03/08/13

HANSON

© Copyright Hanson Professional Services Inc., 2013
Hanson Professional Services Inc.
1525 South Sixth Street
Springfield, Illinois 62703-2886

GRADE DITCH PARALLEL TO MAIN RUNWAY

COUNTERPOISE DETAILS FOR FAA REIL CIRCUITS

MAR 11, 2013 12:39 PM HARRI01115
pw:\\spi-svr306.hanson.com:Hanson Projects\Documents\11Jobs\11A0190\11A0190\CAD\Airport\Sheet\E-505-DTL