F.A.P. RTE.	SECTION	COUNTY	TOTAL SHEETS	SHEET NO.
344	2005-059 TS	LAKE	12	10
STA.		TO STA.		
FED. ROAD DIST. NO.	ILLINOIS	FED. AID PROJECT		

CONTRACT NO. 60A45

CONTROLLER SEQUENCE

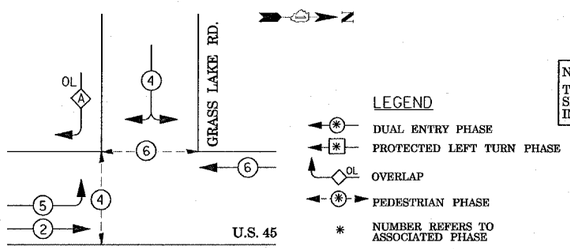

PHASE DESIGNATION DIAGRAM

DUAL ENTRY
PROTECTED/PERMITTED LEFT TURN PHASING
WITH RIGHT TURN OVERLAPS

RIGHT TURN OVERLAP PHASE DESIGNATION

OVERLAP LETTER		PERMISSIVE PHASE		PROTECTED PHASE
A	=	4	+	5

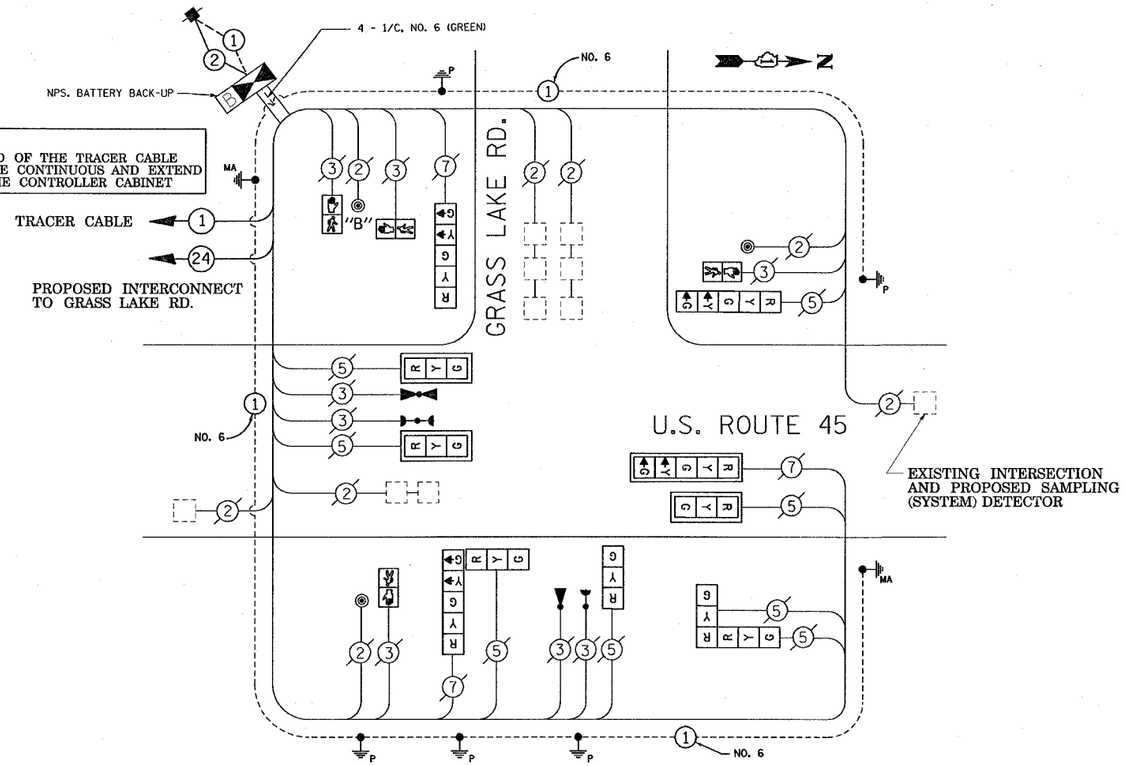

EMERGENCY VEHICLE PREEMPTION SEQUENCE

PROPOSED EMERGENCY VEHICLE PREEMPTORS		
EMERGENCY VEHICLE PREEMPTOR	3	4
MOVEMENT	⇄	↓

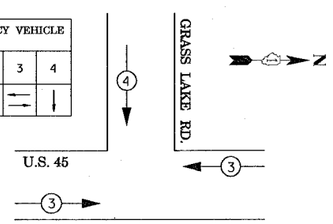

SCHEDULE OF QUANTITIES

ITEM	UNIT	QUANTITY
ENGINEER'S FIELD OFFICE, TYPE A	CAL MO	0.5
GROUNDING EXISTING HANDHOLE FRAME AND COVER	EACH	3
MAINTENANCE OF EXISTING TRAFFIC SIGNAL INSTALLATION	EACH	1
FULL ACTUATED CONTROLLER AND TYPE IV CABINET	EACH	1
TRANSCEIVER - FIBER OPTIC	EACH	1
ELECTRIC CABLE IN CONDUIT, GROUNDING, NO.6 1C	FOOT	545
ELECTRIC CABLE IN CONDUIT, SERVICE, NO. 6 2C	FOOT	46
SIGNAL HEAD, LED, 1-FACE, 3-SECTION, MAST ARM MOUNTED	EACH	3
SIGNAL HEAD, LED, 1-FACE, 5-SECTION, MAST ARM MOUNTED	EACH	1
SIGNAL HEAD, LED, 1-FACE, 5- SECTION, BRACKET MOUNTED	EACH	2
SIGNAL HEAD, LED, 2-FACE, 3- SECTION, BRACKET MOUNTED	EACH	1
SIGNAL HEAD, LED, 2-FACE, 1-3 SECTION, 1-5 SECTION, BRACKET MOUNTED	EACH	1
PEDESTRIAN SIGNAL HEAD, LED, 1-FACE, BRACKET MOUNTED	EACH	2
PEDESTRIAN SIGNAL HEAD, LED, 2-FACE, BRACKET MOUNTED	EACH	1
TRAFFIC SIGNAL BACKPLATE, LOUVERED, ALUMINUM	EACH	4
INDUCTIVE LOOP DETECTOR	EACH	5
PEDESTRIAN PUSH-BUTTON	EACH	3
SERVICE INSTALLATION, POLE-MOUNTED	EACH	1
REMOVE EXISTING TRAFFIC SIGNAL EQUIPMENT	EACH	1
✳ EMERGENCY VEHICLE SYSTEM DETECTOR AND COMFIRMATION BEACON	EACH	2
✳ LIGHT DETECTOR AMPLIFIER	EACH	1

✳ 100% COST TO LAKE VILLA FIRE PROTECTION DISTRICT.

I.D.O.T
TRAFFIC SIGNAL INSTALLATION
ELECTRICAL SERVICE REQUIREMENTS

TYPE	NO. LAMPS	X WATTAGE INCAND.	WATTAGE LED	X %OPERATION	TOTAL WATTAGE
SIGNAL (RED)	11	135	17	0.50	93.50
(YELLOW)	11	135	25	0.25	68.75
(GREEN)	11	135	15	0.25	41.25
ARROW	8	135	12	0.10	09.60
PED. SIGNAL	4	90	25	1.00	100.00
CONTROLLER	1	100	100	1.00	100.00
ILLUM. SIGN		84		0.05	
FLASHER				0.50	
				TOTAL =	413.10

ENERGY COSTS TO:
ILLINOIS DEPARTMENT OF TRANSPORTATION
201 WEST CENTER COURT
SCHAUMBURG, ILLINOIS 60196-1096
ENERGY SUPPLY CONTACT: _____
PHONE: _____
COMPANY: COMMONWEALTH EDISON

FOUNDATION (DEPTH)	FT. (m)	CABLE SLACK	FT. (m)	VERTICAL	FT. (m)
TYPE A - POST	4 (1.2)	HANDHOLE	6.5 (2.0)	ALL FOUNDATIONS	3.5 (1.0)
D - CONTROLLER	4 (1.2)	DOUBLE HANDHOLE	13 (4.0)	MAST ARM (L) POLE	20'+L-2=
E - M. ARM POLE		SIGNAL POST	2 (1.0)		(6m+L-0.6m)=
24" (600mm)	10 (3.0)	CONTROLLER CAB.	1 (0.5)	BRACKET MOUNTED	13 (4.0)
30" (750mm)	15 (4.6)	FIBER OPTIC	13 (4.0)	PED. PUSHBUTTON	4 (1.2)
		ELECTRIC SERVICE	1 (0.5)	ELECTRIC SERVICE	13.5 (4.1)
		GROUND CABLE	1 (0.5)	SERVICE TO GROUND	13.5 (4.1)
				POST MOUNTED	6 (1.8)

CONSTRUCTION NOTES:

1. REMOVE EXISTING CONTROLLER AND CABINET. INSTALL A NEW MASTER AND LOCAL CONTROLLER IN TYPE V CABINET. RELOCATE EXISTING EMERGENCY VEHICLE PRIORITY SYSTEM PHASING UNIT TO NEW CONTROLLER CABINET. RELOCATION OF THE EXISTING EMERGENCY PRIORITY SYSTEM SHALL BE INCLUDED IN THE NEW CONTROLLER UNIT PRICE
2. REMOVE EXISTING PEDESTRIAN PUSH-BUTTON. INSTALL NEW PEDESTRIAN PUSH BUTTON.
3. REMOVE EXISTING E.V.P. AND 2 CHANNEL LIGHT DETECTOR AMPLIFIER AND REPLACE NEW E.V.P. WITH 4 CHANNEL LIGHT DETECTOR AMPLIFIER
4. THE CONTRACTOR SHALL BE REQUIRED TO MAINTAIN THE OPERATION OF THE TRAFFIC SIGNALS DURING THE ENTIRE PROJECT
5. INSTALL 1 NEW U.P.S. BATTERY BACK-UP

CABLE PLAN LEGEND

	PROPOSED	EXISTING
CONTROLLER CABINET		
RAILROAD CONTROL CABINET		
SERVICE INSTALLATION, (P) POLE OR (G) GROUND MOUNT	P	P
TELEPHONE CONNECTION	T	T
GROUND ROD AT (C) CONTROLLER, (H)HANDHOLE, (P) POST, (M) MAST ARM, OR (S) SERVICE	C	C
FIBER OPTIC CABLE IN CONDUIT, NUMBER OF FIBERS AS NOTED	24	24
ELECTRIC CABLE IN CONDUIT, NO. 14, UNLESS OTHERWISE NOTED. NUMBER OF CONDUCTORS AS NOTED	2	2
GROUND CABLE IN CONDUIT NO. 6 COPPER (GREEN)	1	1
SIGNAL FACE WITH BACKPLATE. "P" INDICATES PROGRAMMED HEAD	R Y G Y G "P"	R Y G Y G "P"
12" (300mm) RED WITH 8" (200mm) YELLOW AND GREEN TRAFFIC SIGNAL FACE		R Y G
12" (300mm) TRAFFIC SIGNAL SECTION	R	R
12" (300mm) PEDESTRIAN SIGNAL SECTION		OR DW W
ILLUMINATED SIGN "NO LEFT TURN"		
ILLUMINATED SIGN "NO RIGHT TURN"		
PUSHBUTTON DETECTOR		
DETECTOR LOOP		
PREFORMED DETECTOR LOOP		
MICROWAVE VEHICLE SENSOR	M	M
VIDEO DETECTOR	V	V
CLOSED CIRCUT TV	C	C
EMERGENCY VEHICLE SYSTEM DETECTOR		
CONFIRMATION BEACON		
UNINTERRUPTIBLE POWER SUPPLY (U.P.S.)	B	

REVISIONS	
NAME	DATE

ILLINOIS DEPARTMENT OF TRANSPORTATION

CABLE PLAN, PHASE DESIGNATION DIAGRAM, EMERGENCY VEHICLE PREEMPTION SEQUENCE AND SCHEDULE OF QUANTITIES

US 45 AT GRASS LAKE ROAD

SCALE: NONE
DATE 1/29/2007

DRAWN BY: SN
DESIGNED BY: SN
CHECKED BY: DAD

PLOT DATE = 1/29/2007
FILE NAME = o:\projects\traffic\d550209\us45grassln.n32.dgn
PLOT SCALE = 20.0000 ' / IN.
USER NAME = nguyenvm

: 13:12:13 01/29/2007