ROUTE NO.	SECTION	COUNTY	TOTAL SHEETS	SHEET NO.
F.A.I. 70	*	ST. CLAIR	99	71
FED. ROAD DIST. NO. 7		ILLINOIS	FED. AID PROJECT: IM-70	

* 82-3HVB-3R-5 SHEET S-50 OF S-56

CONTRACT NO. 76985

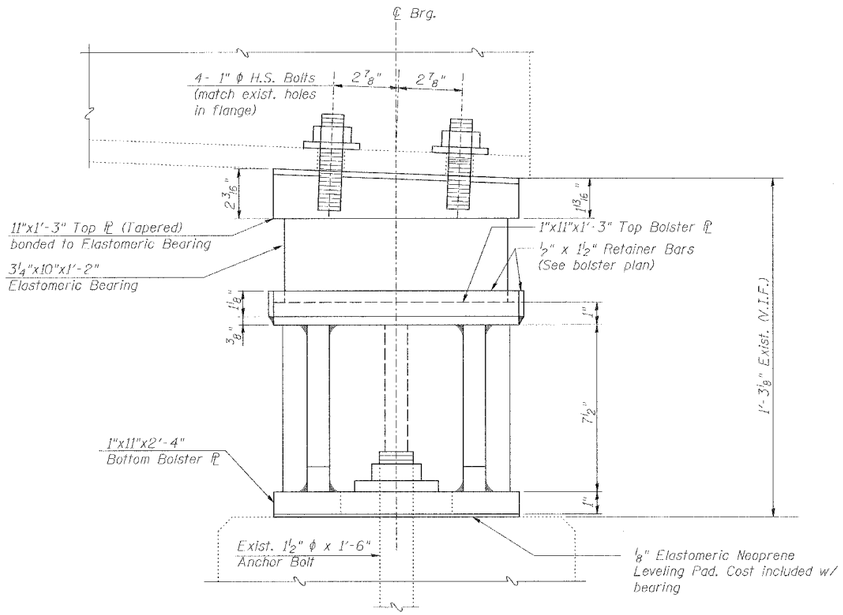

1 S50 BEARING ELEVATION

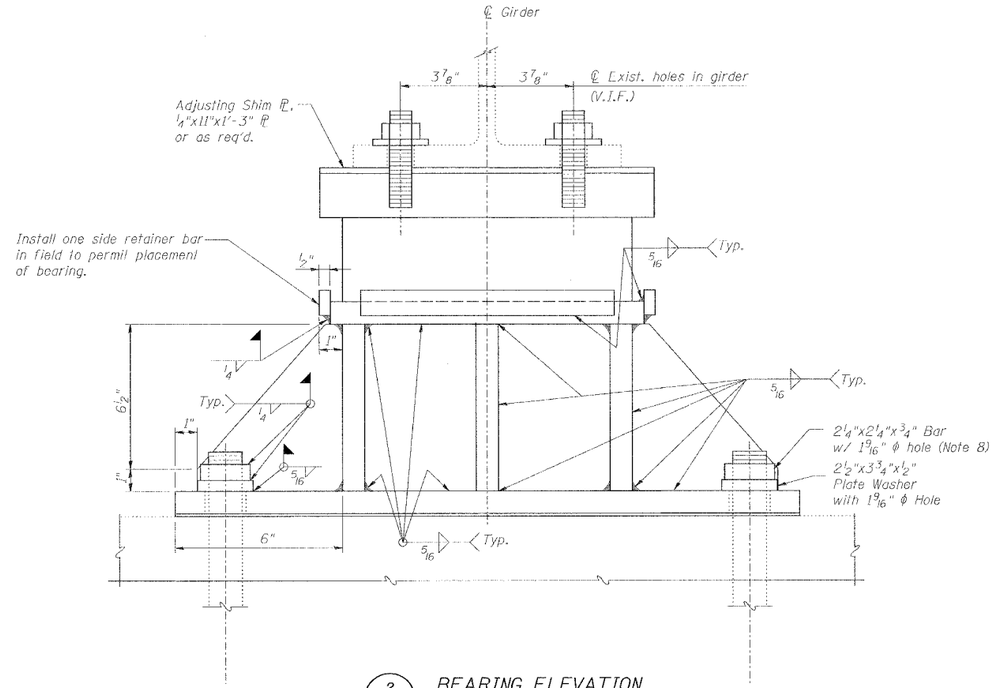

2 S50 BEARING ELEVATION

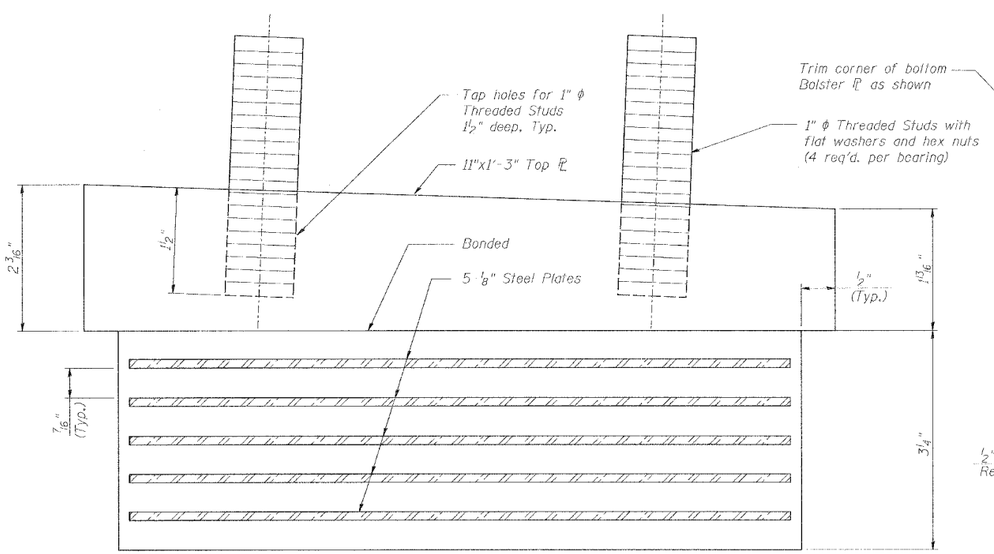

3 S50 ELASTOMERIC BEARING DETAIL

(Type 1)

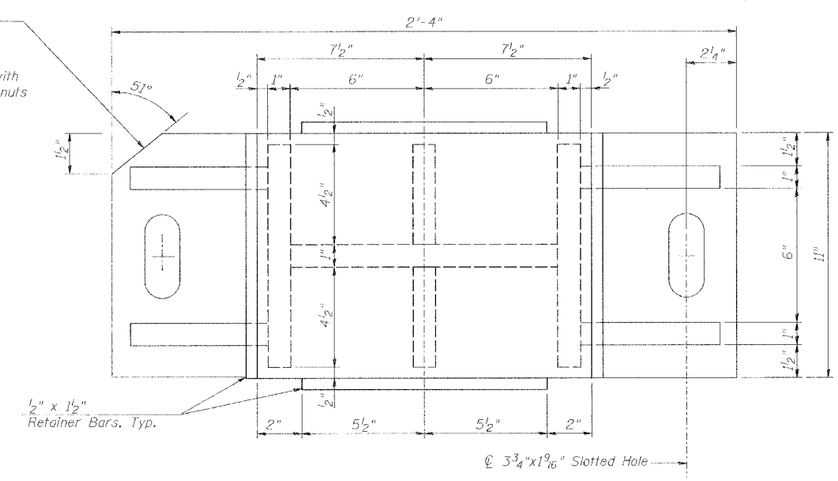

4 S50 BOLSTER PLAN

Notes:

1. Bearings to be replaced are 5 exist. Rocker Bearings at A46.
2. Exist. anchor bolts to be reused. Regrout in place where necessary.
3. Air tempearature at time of setting the Elastomeric Bearing shall not be lower than 35° or higher than 65°F.
4. Area between Retainer Bars and Elastomeric Bearing to be filled with sealer 1" thick, sloped to drain. (Elastomeric Polymer Type Sealer)
5. The cost of the 2" Top Plate is included in the unit bid for "Elastomeric Bearing, Type 1".
6. Shoring shall be included with bearing replacement.
7. Exist. anchor bolts shall be cut off 1/2" above the 3/4" bar.
8. May use standard nut if full engagement of threads is achieved.

REVISIONS	
NAME	DATE

BEARING DETAILS

STATE OF ILLINOIS
DEPARTMENT OF TRANSPORTATION
REHABILITATION AND RETROFIT REPAIRS
FAI ROUTE 70
POPLAR STREET BRIDGE APPROACHES
ST. CLAIR COUNTY

STRUCTURE NO. 082-0141 (ROADWAY A)

SCALE: N.T.S.

DATE: 02/01/2007

DESIGNED	APJ
CHECKED	JEL
DRAWN	CLK
CHECKED	JEL

DATE: 1242007
FILENAME: P:\2001\1201-1300\2001.1240\Drafting\RoadwayRehab_AT\RampA\bearings\A-BEAR02.dgn