ROUTE NO.	SECTION	COUNTY	TOTAL SHEETS	SHEET NO.
C.H. 14 F.A.S. 209	00-00091-00-BR	MERCER	III	II
FED. ROAD DIST. NO.		ILLINOIS	PROJECT	

CONTRACT NO. 89312

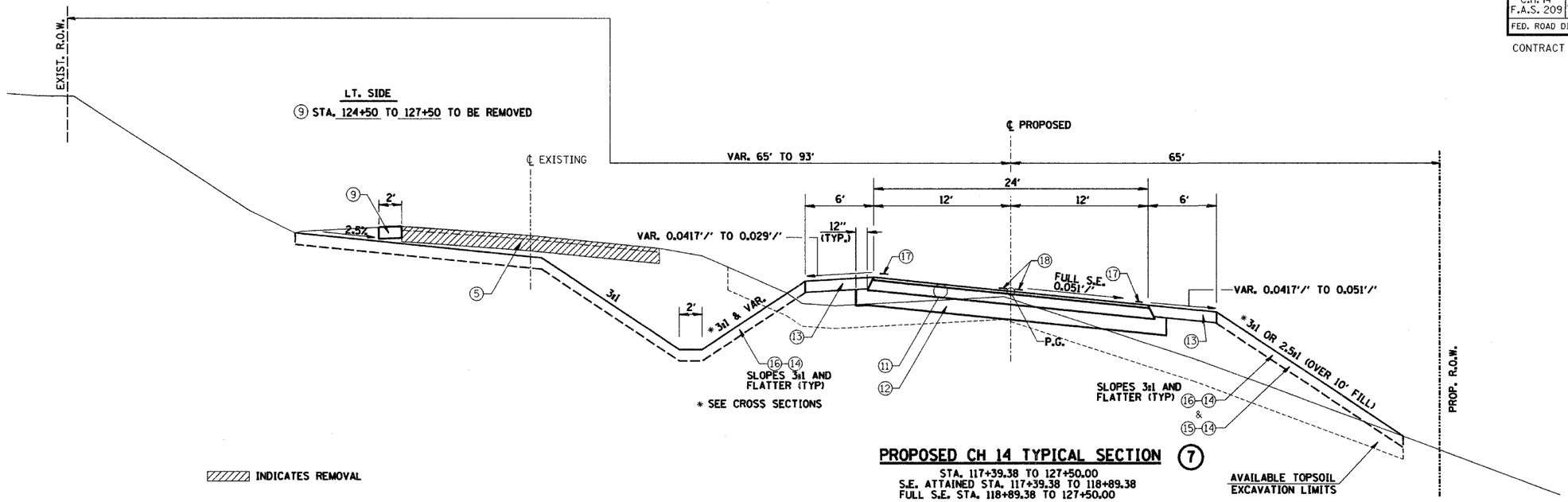

PROPOSED CH 14 TYPICAL SECTION (7)

STA. 117+39.38 TO 127+50.00
S.E. ATTAINED STA. 117+39.38 TO 118+89.38
FULL S.E. STA. 118+89.38 TO 127+50.00

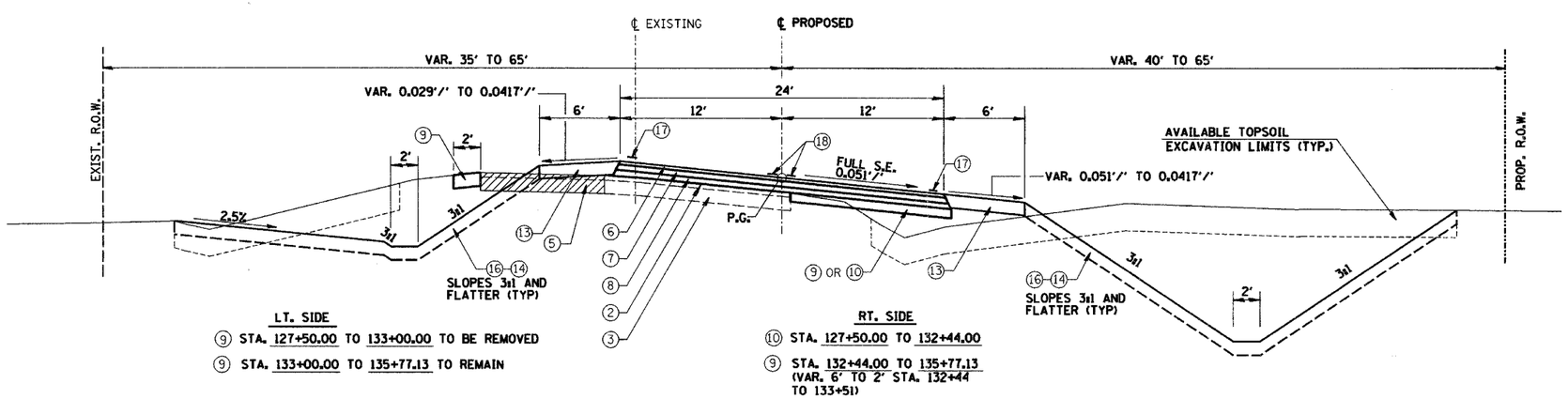

LT. SIDE

⑨ STA. 127+50.00 TO 133+00.00 TO BE REMOVED

⑨ STA. 133+00.00 TO 135+77.13 TO REMAIN

RT. SIDE

⑩ STA. 127+50.00 TO 132+44.00

⑨ STA. 132+44.00 TO 135+77.13 (VAR. 6' TO 2' STA. 132+44 TO 133+51)

PROPOSED CH 14 TYPICAL SECTION (8)

STA. 127+50.00 TO 135+77.13
FULL S.E. STA. 127+50.00 TO 134+27.13
S.E. REMOVED STA. 134+27.13 TO 135+77.13

1. EXISTING BITUMINOUS OVERLAY (VARIES 0" TO 6")
2. EXISTING A3 SURFACE 2"
3. EXISTING AGGREGATE BASE 16"
4. EXISTING AGGREGATE SURFACE 8"
5. EXISTING PAVEMENT REMOVAL
6. HOT-MIX ASPHALT SURFACE COURSE, MIX "C", N50 (2")
7. HOT-MIX ASPHALT BINDER COURSE, IL-19.0, N50 (4½")
8. HOT-MIX ASPHALT BINDER COURSE, IL-19.0, N50 (VARIABLE DEPTH)
9. HOT-MIX ASPHALLT BASE COURSE WIDENING, 6"
10. HOT-MIX ASPHALT BASE COURSE, 4"
11. HOT-MIX ASPHALT PAVEMENT (FULL DEPTH), 6½"
12. SUB-BASE GRANULAR MATERIAL, TYPE B (9½")
13. AGGREGATE SHOULDERS, TYPE A (6")
14. TOP SOIL (4")
15. SEEDING, CLASS 3 W/ EROSION CONTROL BLANKET
16. SEEDING, CLASS 2A
17. 4" SOLID WHITE EDGE LINE
18. 4" SOLID YELLOW DOUBLE CENTERLINE
19. AGGREGATE SURFACE COURSE, TYPE A (8")

PROPOSED TYPICAL SECTIONS

Date	Designed: SMK	F.A.S. 209 (C.H. 14) OVER KEATING CREEK NEW BOSTON ROAD SECTION 00-00091-00-BR MERCER COUNTY
Revisions	Drawn: MEC	
	Checked: SMK	
	Approved: SMK	
Prepared by: URS	345 East Ash Avenue Decatur, Il. 62526	URS Job No. 21-00001253.01