CONTRACT NO. 98950

F.A. RTE.	SECTION	COUNTY	TOTAL SHEETS	SHEET NO.
*	**	WILLIAMSON	917	809
STA.		TO STA.		
FED. ROAD DIST. NO.	ILLINOIS	FED. AID PROJECT		

* I-57, & OLD IL 13 (FAU 9629)
** (X1-6-2)VB-2,(X1-6)HBK-2

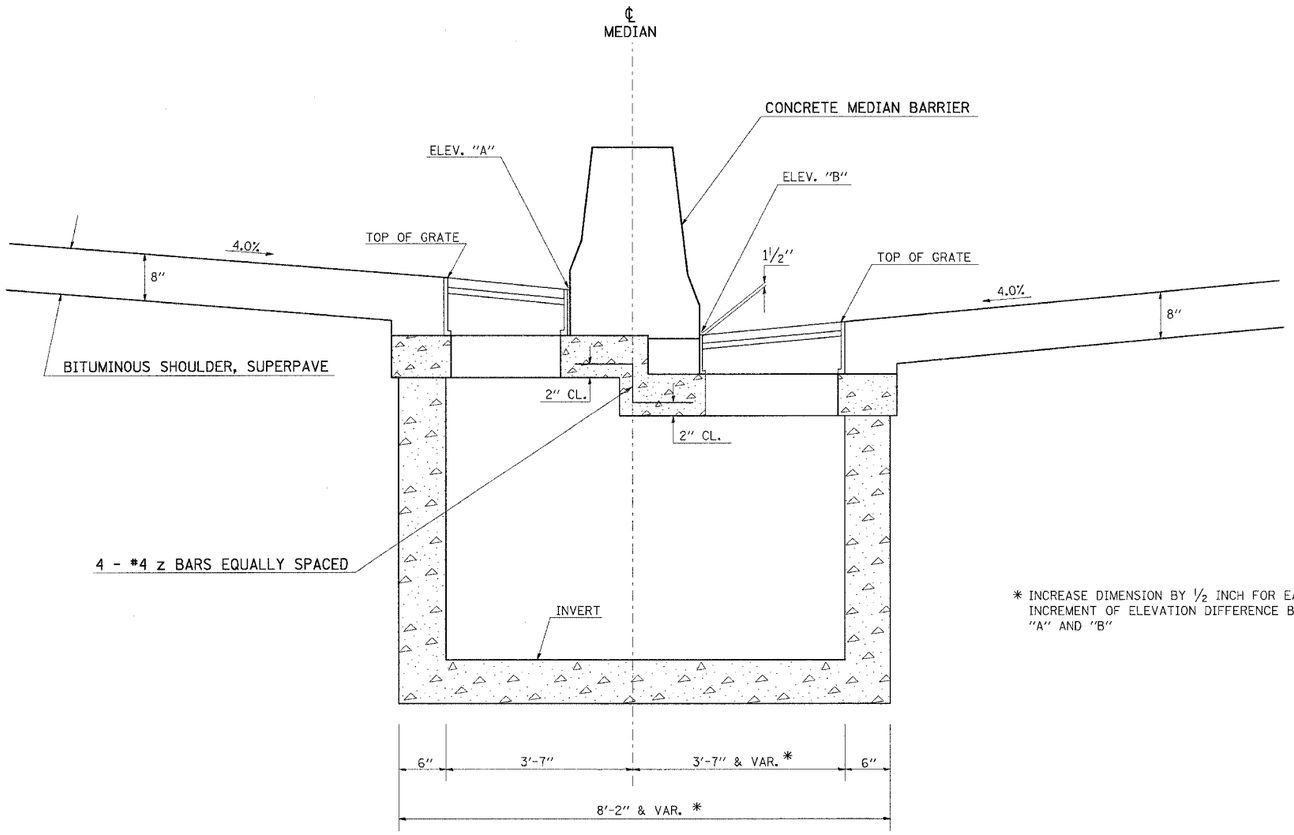

NOTES:

1. SEE STANDARDS 602106 AND 637006 FOR ADDITIONAL DETAILS.
2. USE 8 T_1 REINFORCEMENT BARS (4 ON EACH SIDE) IN THE CENTER PORTION OF THE LID INSTEAD OF 7 AS SHOWN ON THE STANDARD.
3. THE #4 z BARS MAY BE CUT AND BENT TO FIT IN THE FIELD.
4. THE #6 TRANSVERSE BARS SHOWN ON STANDARD 602106 MAY BE CUT INTO EQUAL LENGTHS TO FIT THE TWO HALVES OF THE LID AT DIFFERENT ELEVATIONS.
5. THE ADDITIONAL REINFORCEMENT BARS REQUIRED SHALL BE INCLUDED IN THE CONTRACT PRICE FOR **DRAINAGE STRUCTURES, TYPE 4,** AND NO ADDITIONAL PAYMENT WILL BE ALLOWED.

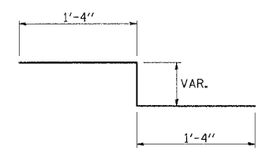

#4 z BAR

* INCREASE DIMENSION BY ½ INCH FOR EACH 6" INCREMENT OF ELEVATION DIFFERENCE BETWEEN "A" AND "B"

REVISIONS	
NAME	DATE

ILLINOIS DEPARTMENT OF TRANSPORTATION

DETAIL OF DRAINAGE STRUCTURE, TYPE 4
WHERE NB AND SB LANES ARE AT DIFFERENT ELEVATIONS

SCALE: VERT. HORIZ. NONE
DATE
DRAWN BY CNH
CHECKED BY EES

PLOT DATE = 12/13/2006
FILE NAME = c:\projects\98288?\sldl3\sldl3p3.dgn
PLOT SCALE = 60.0000 ' / IN.
USER NAME = headerc