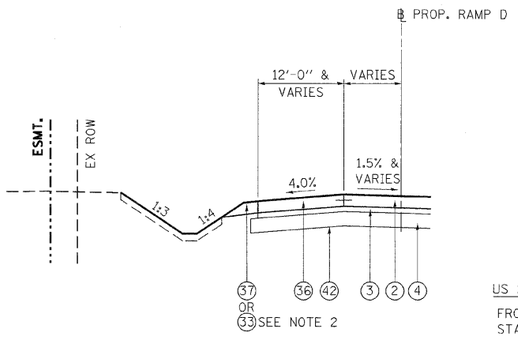

DETAIL I-1

RAMP D: STA 1+57.63 TO STA 3+90.07

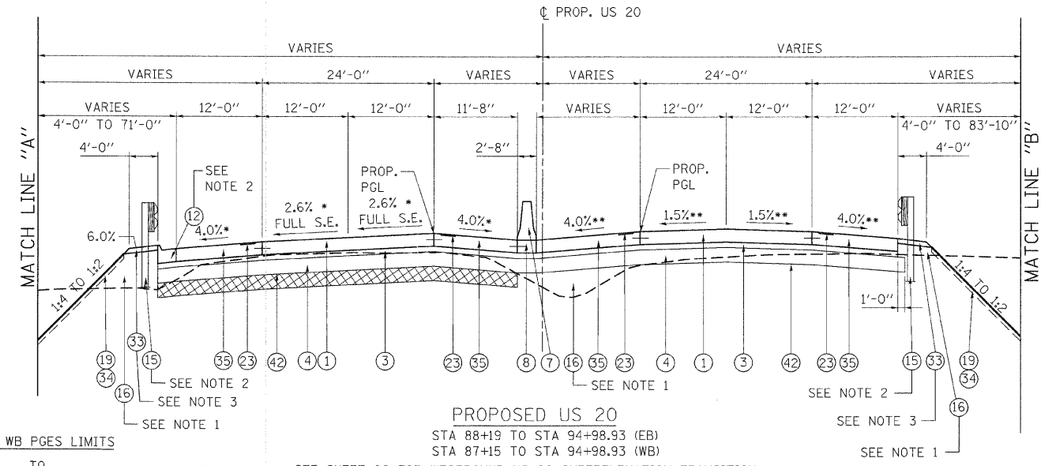

PROPOSED US 20

STA 88+19 TO STA 94+98.93 (EB)

STA 87+15 TO STA 94+98.93 (WB)

US 20 WB PGES LIMITS

FROM STA	TO STA	WIDTH	THICKNESS
86+50	89+00	58' (8' LT TO 66' LT)	12"

* SEE SHEET 96 FOR WESTBOUND US 20 SUPERELEVATION TRANSITION

** SEE SHEET 95 FOR EASTBOUND US 20 SUPERELEVATION TRANSITIONS

\# SEE SHEET 98 FOR RAMP C SUPERELEVATION TRANSITIONS

\#\# SEE SHEET 98 FOR RAMP D SUPERELEVATION TRANSITIONS

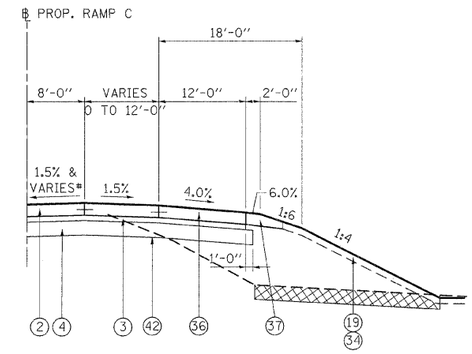

DETAIL I-2

RAMP C: STA 11+00.00 TO STA 17+97.00

RAMP C PGES LIMITS

FROM STA	TO STA	WIDTH	THICKNESS
9+50	14+00	EX. TOE TO PR. TOE	12"

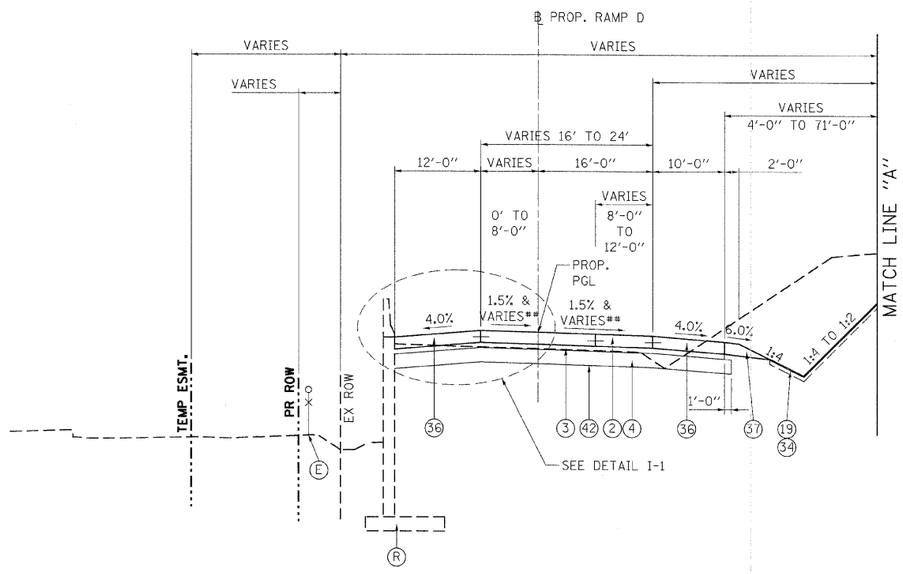

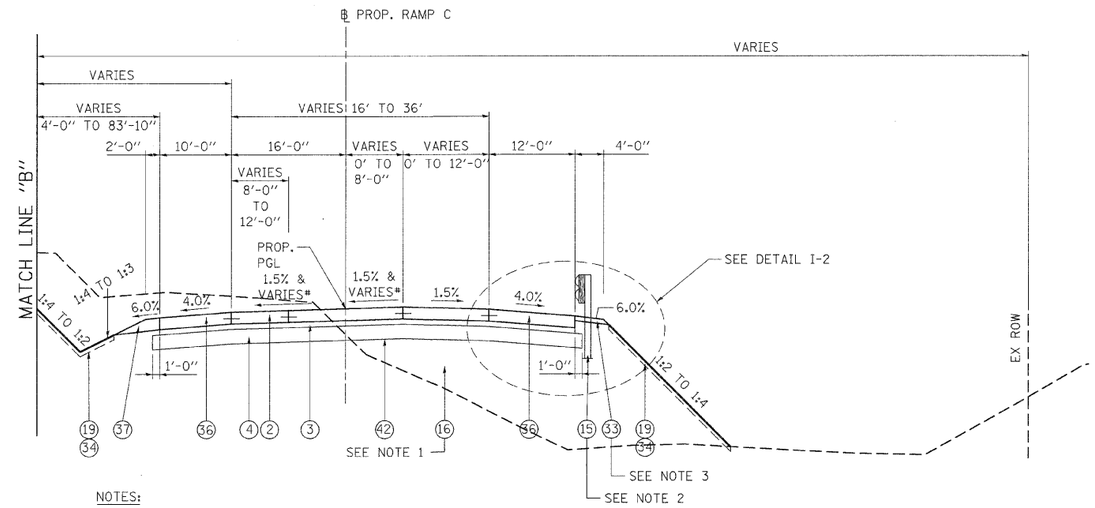

□ = GEOTECHNICAL FABRIC FOR GROUND STABILIZATION SHALL BE PLACED BENEATH THE ENTIRE LIMITS OF PROPOSED AGGREGATE SUBGRADE 12" ON US ROUTE 20 AND RAMPS.

□□ = FOR PAVEMENTS AND SHOULDERS ON US ROUTE 20 AND RAMPS, THESE ITEMS SHALL BE CONSTRUCTED TO 30-YEAR EXTENDED LIFE PAVEMENT REQUIREMENTS.

NOTES:

1. ALL PROPOSED EMBANKMENT CONSTRUCTED ALONG ROUTE U.S. 20 SHALL BE CONSTRUCTED ACCORDING TO THE "EMBANKMENT I" AND "EMBANKMENT STABILITY" SPECIAL PROVISIONS. THE COST FOR THIS WORK SHALL BE INCLUDED IN THE CONTRACT UNIT PRICE FOR "EARTH EXCAVATION" OR "FURNISHED EXCAVATION" AS APPLICABLE.
2. SEE ROADWAY PLANS FOR LIMITS.
3. AGGREGATE SHOULDERS, TYPE B 10" SHALL BE USED AT NON GUARDRAIL LOCATIONS. SEE ROADWAY PLANS FOR LIMITS.
4. SEE PAVEMENT JOINTING PLANS FOR PAVEMENT JOINTS.

EXISTING LEGEND

REMOVAL

- (A) PCC PAVEMENT (10" AND VARIES)
- (B) HMA SURFACE (3" AND VARIES)
- (C) HMA SHOULDER (8" AND VARIES)
- (D) HMA SHOULDER (6" AND VARIES)
- (E) FENCE
- (F) CONCRETE MEDIAN BARRIER & BASE
- (G) PCC SHOULDER (10" AND VARIES)
- (H) TOPSOIL REMOVAL (X")
- (I) HMA BASE COURSE
- (J) HMA PAVEMENT
- (K) PCC SIDE WALK
- (L) CURB AND GUTTER
- (M) CONCRETE MEDIAN
- (N) STEEL PLATE BEAM GUARDRAIL
- (O) TEMP PAVEMENT
- (P) TEMPORARY CONCRETE BARRIER
- (R) RETAINING WALL (CAST-IN-PLACE)
- (S) TEMP. SOIL RETENTION SYSTEM
- (T) SUBBASE GRANULAR MATERIAL, TYPE C (10")
- (U) PCC PAVEMENT
- (V) PCC PAVEMENT (11" AND VARIES)
- (W) HMA SURFACE (4" AND VARIES)
- (X) HMA SURFACE (5" AND VARIES)
- (Y) HMA SURFACE (6" AND VARIES)
- (Z) CONC CURB TB
- (AA) REMOVAL AND DISPOSAL OF UNSUITABLE MATERIAL

PROPOSED LEGEND

PGES

- (1) CONTINUOUSLY REINFORCED CONCRETE PAVEMENT 10 3/4" □□
- (2) PCC PVT 10 JOINTED □□
- (3) STABILIZED SUBBASE (HMA) 4 1/2"
- (4) AGGREGATE SUBGRADE 12"
- (5) HOT-MIX ASPHALT SURACE COURSE, MIX "D", N70, 2"
- (6) SUB-BASE GRANULAR MATERIAL, TYPE B 12"
- (7) CONCRETE BARRIER, DOUBLE FACE, 32" HEIGHT
- (8) CONCRETE BARRIER BASE
- (9) AGG WEDGE SHLD TYPE B
- (10) COMB CC&G TB6.12
- (11) COMB CC&G TB6.24
- (12) COMB CC&G TM4.24
- (13) CONC CURB TB SPL
- (14) PC CONC SIDEWALK 5
- (15) SPBGR TY A 6FT POSTS
- (16) EMBANKMENT
- (17) RETAINING WALL (SEE STRUCTURAL PLANS)
- (18) DRILL AND GROUT #6 TIE BARS
- (19) TOPSOIL FURNISH AND PLACE, 6"
- (20) TOPSOIL FURNISH AND PLACE, 10"
- (21) HOT-MIX ASPHALT SURFACE COURSE, MIX "D", N70, 1 3/4"
- (22) HOT-MIX ASPHALT BASE COURSE, 8"
- (23) SHOULDER RUMBLE STRIPS, 16"
- (24) AGGREGATE SURFACE COURSE, TYPE B, 4"
- (25) CONCRETE MEDIAN SURFACE, 4 INCH
- (26) CONCRETE MEDIAN, TYPE SB (SPECIAL)
- (27) POLY. HMA SURFACE COURSE, MIX "F", N90 1 3/4"
- (28) CHAIN LINK FENCE, 4'
- (29) POLY. LEVELING BINDER (MM), IL-4.75, N50 3/4" (MIN)
- (30) HOT-MIX ASPHALT SURFACE COURSE, MIX "D", N70, 3"
- (31) POLY. HMA SURFACE COURSE, MIX "F", N90 2"
- (32) COMB CC&G TB6.06
- (33) AGGREGATE SHOULDERS, TYPE B 4"
- (34) SEEDING (SEE LANDSCAPING PLANS)
- (35) PCC SHOULDERS 10 3/4" □□
- (36) PCC SHOULDERS 10" □□
- (37) AGGREGATE SHOULDERS, TYPE B 10"
- (38) CONCRETE BARRIER, SINGLE FACE 42" HEIGHT (SPECIAL)
- (39) CORRUGATED MEDIAN
- (40) HOT-MIX ASPHALT BASE COURSE, 7"
- (41) SODDING, SALT TOLERANT
- (42) GEOTECH FAB F/GR STAB □

FILE NAME = $FILEL$	USER NAME = $USER$	DESIGNED - MRK	REVISED -
		DRAWN - MRK	REVISED -
	PLOT SCALE = $SCALE$	CHECKED - DDH	REVISED -
	PLOT DATE = $DATE$	DATE - 01/26/12	REVISED -

TENG — TENG & ASSOCIATES, INC. ENGINEERS/ARCHITECTS/PLANNERS CHICAGO, ILLINOIS

STATE OF ILLINOIS
DEPARTMENT OF TRANSPORTATION
FAP ROUTE 345 / US ROUTE 20

PROPOSED TYPICAL SECTIONS
U.S. ROUTE 20

SCALE: 1"=10' | SHEET NO. OF | STA. 88+19.00 TO STA. 94+98.00

F.A.P RTE.	SECTION	COUNTY	TOTAL SHEETS	SHEET NO.
345	8R-R	KANE	794	26

CONTRACT NO. 60H45

FED. ROAD DIST. NO. | ILLINOIS | FED. AID PROJECT

..\D160H45-XSECT.DGN ..\D160H45-BORDER01.DGN ..\D160H45-LEGEND.DGN
1-26-2012, 16:48:15 STANCIRJ \\FS-2044\WM\VAULT\D-TRANS_07\2202\21379-021\CIVIL\CAD\60H45\SHEET\D160H45-SHT-TYPICAL06.DGN