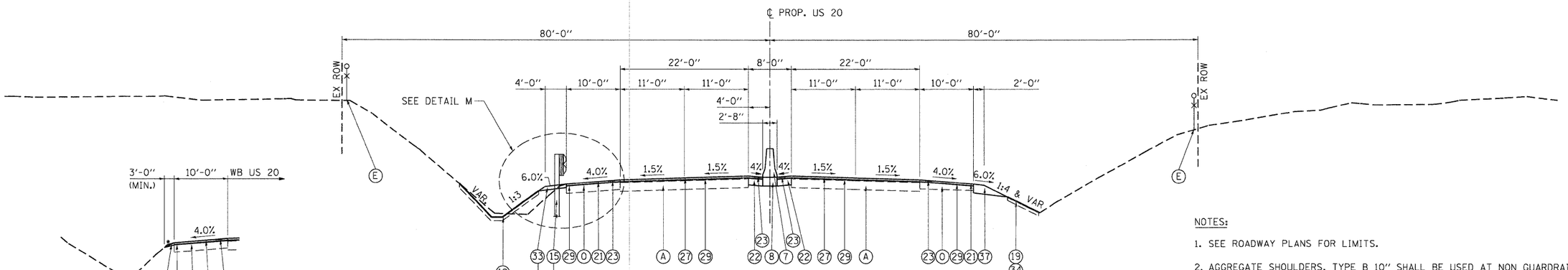

PROPOSED US 20
STA 140+24 TO STA 153+41.34

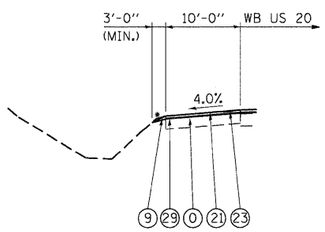

* VARIABLE SLOPE (MAXIMUM 9.0%)

DETAIL M
STA 141+68.15 TO STA 153+41.34

NOTES:

1. SEE ROADWAY PLANS FOR LIMITS.
2. AGGREGATE SHOULDERS, TYPE B 10" SHALL BE USED AT NON GUARDRAIL LOCATIONS. SEE ROADWAY PLANS FOR LIMITS.

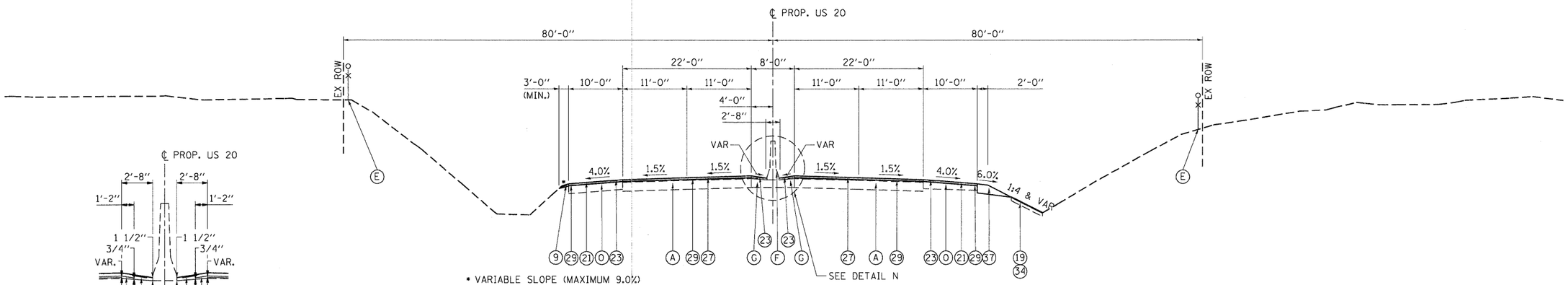

* VARIABLE SLOPE (MAXIMUM 9.0%)

PROPOSED US 20
STA 153+41.34 TO STA 156+02

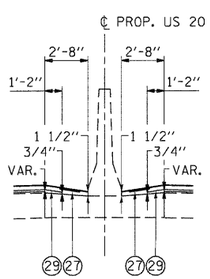

DETAIL N

□□ = FOR PAVEMENTS AND SHOULDERS ON US ROUTE 20 AND RAMPS, THESE ITEMS SHALL BE CONSTRUCTED TO 30-YEAR EXTENDED LIFE PAVEMENT REQUIREMENTS.

EXISTING LEGEND

REMOVAL

- (A) PCC PAVEMENT (10" AND VARIES)
- (B) HMA SURFACE (3" AND VARIES)
- (C) HMA SHOULDER (8" AND VARIES)
- (D) HMA SHOULDER (6" AND VARIES)
- (E) FENCE
- (F) CONCRETE MEDIAN BARRIER & BASE
- (G) PCC SHOULDER (10" AND VARIES)
- (H) TOPSOIL REMOVAL (X")
- (I) HMA BASE COURSE
- (J) HMA PAVEMENT
- (K) PCC SIDE WALK
- (L) CURB AND GUTTER
- (M) CONCRETE MEDIAN
- (N) STEEL PLATE BEAM GUARDRAIL
- (O) TEMP PAVEMENT
- (P) TEMPORARY CONCRETE BARRIER
- (R) RETAINING WALL (CAST-IN-PLACE)
- (S) TEMP. SOIL RETENTION SYSTEM
- (T) SUBBASE GRANULAR MATERIAL, TYPE C (10")
- (U) PCC PAVEMENT
- (V) PCC PAVEMENT (11" AND VARIES)
- (W) HMA SURFACE (4" AND VARIES)
- (X) HMA SURFACE (5" AND VARIES)
- (Y) HMA SURFACE (6" AND VARIES)
- (Z) CONC CURB TB
- (AA) REMOVAL AND DISPOSAL OF UNSUITABLE MATERIAL

PROPOSED LEGEND

PGES

- (1) CONTINUOUSLY REINFORCED CONCRETE PAVEMENT 10 3/4" □□
- (2) PCC PVT 10 JOINTED □□
- (3) STABILIZED SUBBASE (HMA) 4 1/2"
- (4) AGGREGATE SUBGRADE 12"
- (5) HOT-MIX ASPHALT SURACE COURSE, MIX "D", N70, 2"
- (6) SUB-BASE GRANULAR MATERIAL, TYPE B 12"
- (7) CONCRETE BARRIER, DOUBLE FACE, 32" HEIGHT
- (8) CONCRETE BARRIER BASE
- (9) AGG WEDGE SHLD TYPE B
- (10) COMB CC&G TB6.12
- (11) COMB CC&G TB6.24
- (12) COMB CC&G TM4.24
- (13) CONC CURB TB SPL
- (14) PC CONC SIDEWALK 5
- (15) SPBGR TY A 6FT POSTS
- (16) EMBANKMENT
- (17) RETAINING WALL (SEE STRUCTURAL PLANS)
- (18) DRILL AND GROUT #6 TIE BARS
- (19) TOPSOIL FURNISH AND PLACE, 6"
- (20) TOPSOIL FURNISH AND PLACE, 10"
- (21) HOT-MIX ASPHALT SURFACE COURSE, MIX "D", N70, 1 3/4"
- (22) HOT-MIX ASPHALT BASE COURSE, 8"
- (23) SHOULDER RUMBLE STRIPS, 16"
- (24) AGGREGATE SURFACE COURSE, TYPE B, 4"
- (25) CONCRETE MEDIAN SURFACE, 4 INCH
- (26) CONCRETE MEDIAN, TYPE SB (SPECIAL)
- (27) POLY. HMA SURFACE COURSE, MIX "F", N90 1 3/4"
- (28) CHAIN LINK FENCE, 4'
- (29) POLY. LEVELING BINDER (MM), IL-4.75, N50 3/4" (MIN)
- (30) HOT-MIX ASPHALT SURFACE COURSE, MIX "D", N70, 3"
- (31) POLY. HMA SURFACE COURSE, MIX "F", N90 2"
- (32) COMB CC&G TB6.06
- (33) AGGREGATE SHOULDERS, TYPE B 4"
- (34) SEEDING (SEE LANDSCAPING PLANS)
- (35) PCC SHOULDERS 10 3/4" □□
- (36) PCC SHOULDERS 10" □□
- (37) AGGREGATE SHOULDERS, TYPE B 10"
- (38) CONCRETE BARRIER, SINGLE FACE 42" HEIGHT (SPECIAL)
- (39) CORRUGATED MEDIAN
- (40) HOT-MIX ASPHALT BASE COURSE, 7"
- (41) SODDING, SALT TOLERANT

FILE NAME = $FILEL$	USER NAME = $USER$	DESIGNED - MRK	REVISED -
		DRAWN - MRK	REVISED -
	PLOT SCALE = $SCALE$	CHECKED - DDH	REVISED -
	PLOT DATE = $DATE$	DATE - 12/16/11	REVISED -

TENG & ASSOCIATES, INC. ENGINEERS/ARCHITECTS/PLANNERS CHICAGO, ILLINOIS

STATE OF ILLINOIS
DEPARTMENT OF TRANSPORTATION
FAP ROUTE 345 / US ROUTE 20

PROPOSED TYPICAL SECTIONS
U.S. ROUTE 20

SCALE: 1"=10' | SHEET NO. OF | STA. 140+24.00 TO STA. 156+02.00

F.A.P RTE.	SECTION	COUNTY	TOTAL SHEETS	SHEET NO.
345	8R-R	KANE	794	29

CONTRACT NO. 60H45

FED. ROAD DIST. NO. | ILLINOIS | FED. AID PROJECT

...\D16DH45-XSCT1.DGN ...\D16DH45-BORDER0LDGN ...\D16DH45-LEGEND.DGN
12-12-2011, 12:48:08 BAJZEKJ \\FS-0014\MV\VAULT\D-TRANS.07\2202\21379-001\CIVIL\CAD\60H45\SHEET\D162H45-SH1-TYPICALU09.DGN