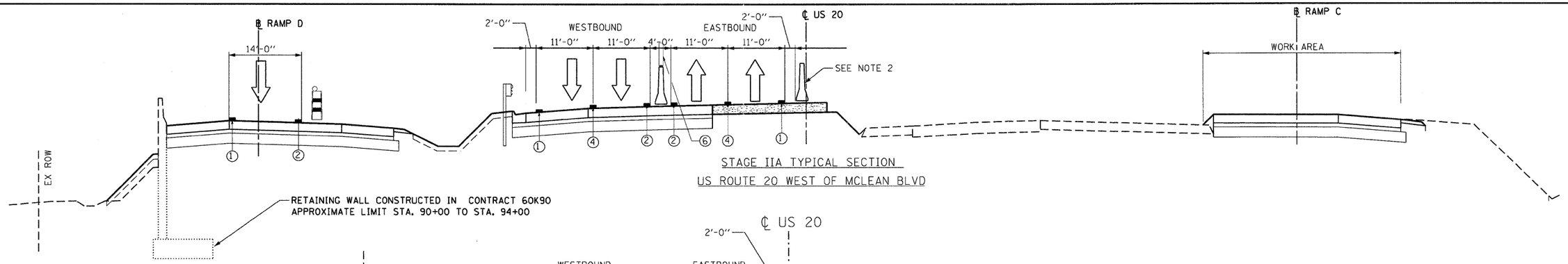

STAGE IIA TYPICAL SECTION
US ROUTE 20 WEST OF MCLEAN BLVD

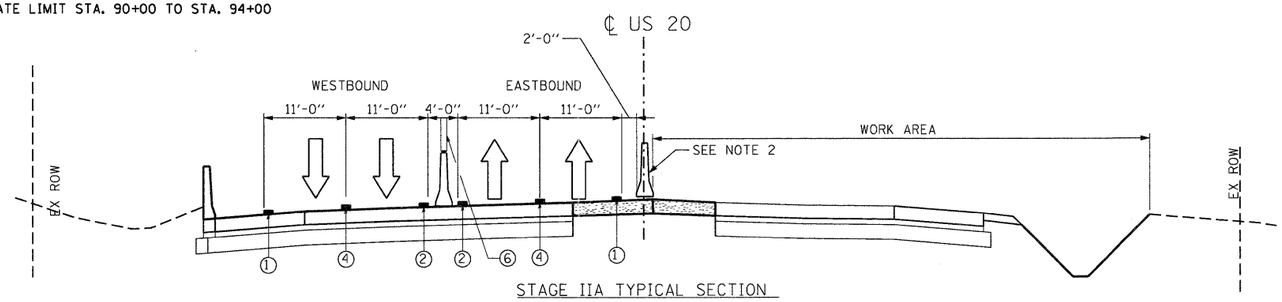

STAGE IIA TYPICAL SECTION
US ROUTE 20 EAST OF MCLEAN BLVD

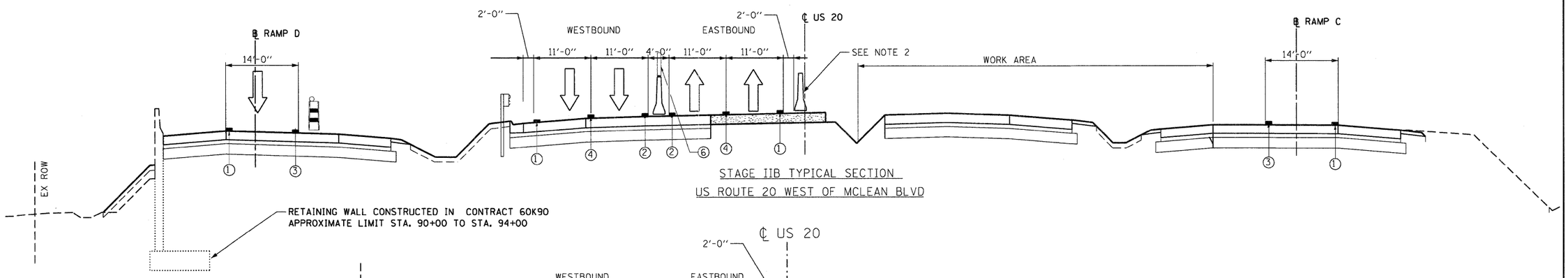

STAGE IIB TYPICAL SECTION
US ROUTE 20 WEST OF MCLEAN BLVD

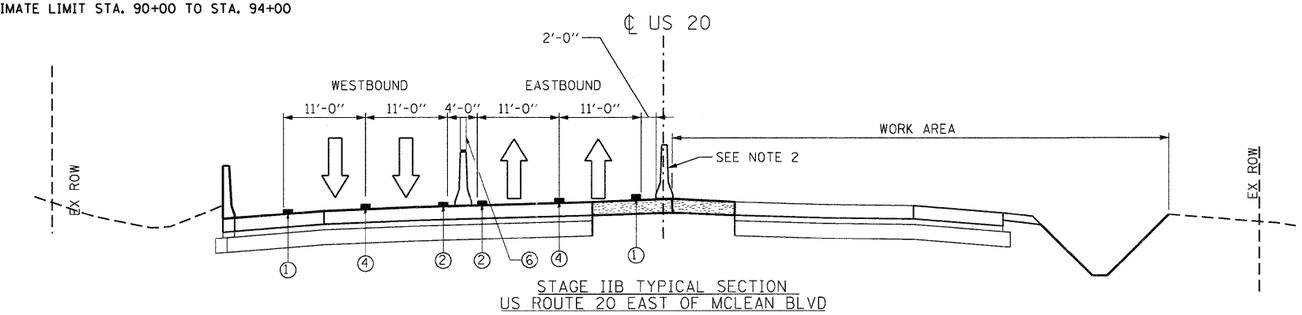

STAGE IIB TYPICAL SECTION
US ROUTE 20 EAST OF MCLEAN BLVD

NOTES:

1. THE TEMPORARY CONCRETE BARRIER SHALL BE SECURED TO THE PAVEMENT USING THREE ANCHORING PINS ON THE TRAFFIC SIDE OF THE BARRIER AT LOCATIONS WHERE A HAZARD OR SLOPE STEEPER THAN 1V:10H EXISTS WITHIN 3 FT OF THE BARRIER. THE COST OF THIS WORK SHALL BE INCLUDED IN THE CONTRACT UNIT PRICE FOR "TEMPORARY CONCRETE BARRIER", OR "RELOCATE TEMPORARY CONCRETE BARRIER" (AS APPLICABLE).
2. THE TEMPORARY CONCRETE BARRIER BETWEEN OPPOSING LANES OF TRAFFIC SHALL BE CENTERED BETWEEN THE LANE LINES OR AS SHOWN ON THE PLANS.
3. TEMPORARY PAVEMENT ON US ROUTE 20 AND RAMPS SHALL BE ACCORDING TO THE PAVEMENT STRUCTURE DETAILS AND MIX DESIGN REQUIREMENTS ON THE TYPICAL SECTIONS SHEET 38.

LEGEND

- TEMPORARY CONCRETE BARRIER
- VERTICAL PANELS WITH FLASHING LIGHT
- DRUM OR BARRICADE WITH FLASHING LIGHT
- DIRECTION OF TRAFFIC
- TEMPORARY PAVEMENT (SEE NOTE 5)

1. WET REFLECTIVE TEMPORARY TAPE TYPE III - LINE 4" WHITE
2. WET REFLECTIVE TEMPORARY TAPE TYPE III - LINE 4" YELLOW
3. WET REFLECTIVE TEMPORARY TAPE TYPE III - LINE 4" WHITE (2' DASH - 6' SKIP)
4. WET REFLECTIVE TEMPORARY TAPE TYPE III - LINE 4" WHITE (10' DASH - 30' SKIP)
5. WET REFLECTIVE TEMPORARY TAPE TYPE III - LINE 8" WHITE
6. MODULAR GLARE SCREEN SYSTEM

FILE NAME = $FILEL$	USER NAME = $USER$	DESIGNED - MM	REVISED -	STATE OF ILLINOIS DEPARTMENT OF TRANSPORTATION FAP ROUTE 345 / US ROUTE 20	STAGING AND TRAFFIC CONTROL U.S. ROUTE 20 TYPICAL SECTIONS STAGE IIA & IIB	F.A.P RTE.	SECTION	COUNTY	TOTAL SHEETS	SHEET NO.
		DRAWN - RJS	REVISED -			345	8R-R	KANE	794	131
TENG TENG & ASSOCIATES, INC. ENGINEERS/ARCHITECTS/PLANNERS CHICAGO, ILLINOIS	PLOT SCALE = $SCALE$	CHECKED - PB	REVISED -			CONTRACT NO. 60H45				
	PLOT DATE = $DATE$	DATE - 12/16/11	REVISED -		SCALE: 1"=10' SHEET NO. OF STA. TO STA.	FED. ROAD DIST. NO.	ILLINOIS	FED. AID PROJECT		

\DI60H45-XSECT.DGN, ..\DI60H45-BORCEPRL.DGN, ..\DI60H45-LEGEND.DGN
22-12-2011 12:03:03 9W:ZENG \\FS-BDA-A01\VOL_TD-TRANS_07\2202\21379-001\CIVIL\CAD\60H45\SHEET\DI60H45-SHT-STAGING02.DGN