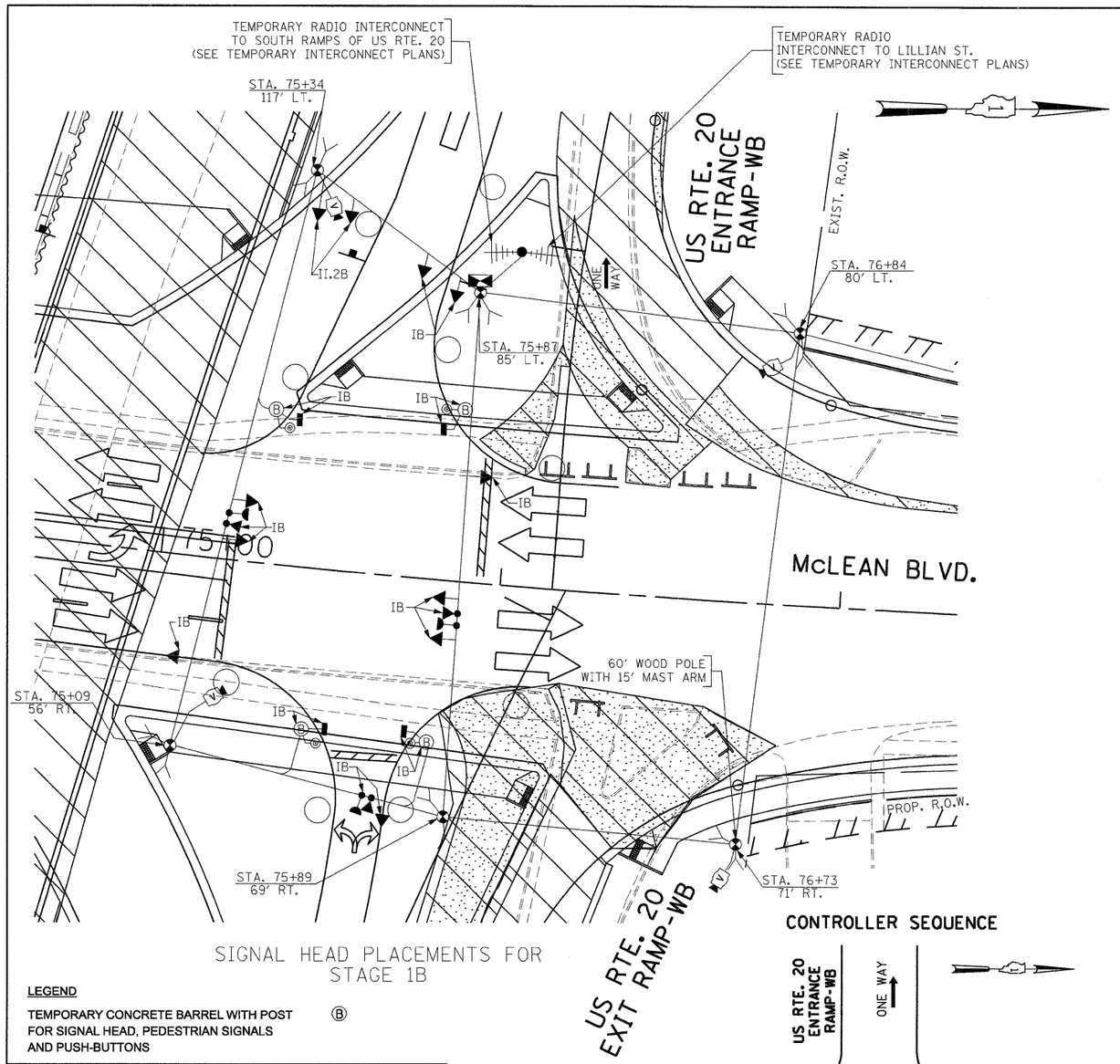

SIGNAL HEAD PLACEMENTS FOR STAGE 1B

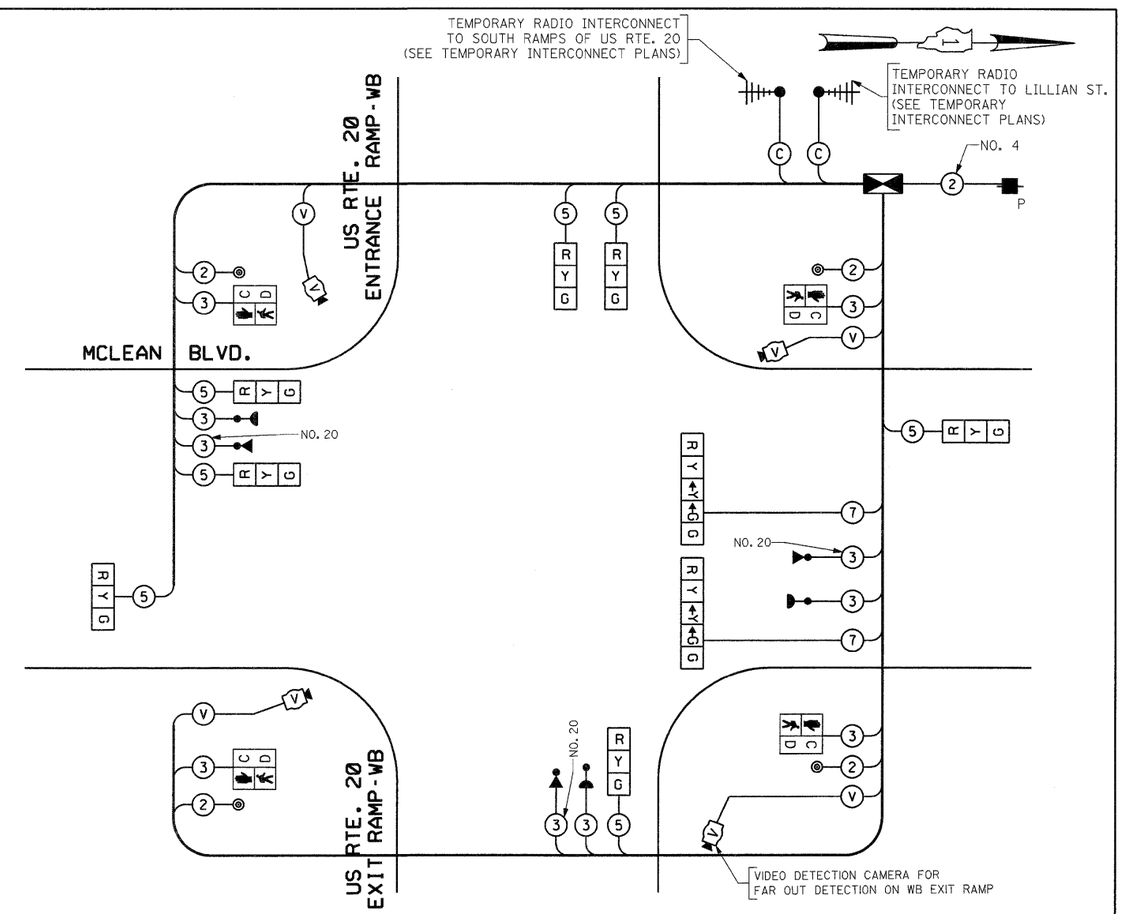

TEMPORARY CABLE PLAN

(NOT TO SCALE)

STAGE 1B

LEGEND

TEMPORARY CONCRETE BARREL WITH POST FOR SIGNAL HEAD, PEDESTRIAN SIGNALS AND PUSH-BUTTONS Ⓑ

I.D.O.T. TRAFFIC SIGNAL INSTALLATION ELECTRICAL SERVICE REQUIREMENTS					TOTAL WATTAGE
TYPE	NO LAMPS	WATTAGE INCAND.	WATTAGE LED	% OPERATION	
SIGNAL (RED)	9	135	17	0.50	76.5
(YELLOW)	9	135	25	0.25	56.25
(GREEN)	9	135	15	0.25	33.75
ARROW	4	135	12	0.10	4.8
PED. SIGNAL	4	90	25	1.00	100
CONTROLLER	1	100	100	1.00	100
ILLUM. SIGN				0.05	
VIDEO SYSTEM	1	150		1.00	150
FLASHER				0.50	
ENERGY COSTS TO:				TOTAL =	521.3

CITY OF ELGIN
150 DEXTER COURT
ELGIN, ILLINOIS 60120-5570

ENERGY SUPPLY CONTACT: ELLIE SARALLO
PHONE: (630) 424 5124
COMPANY: COMMONWEALTH EDISON

CONTROLLER SEQUENCE

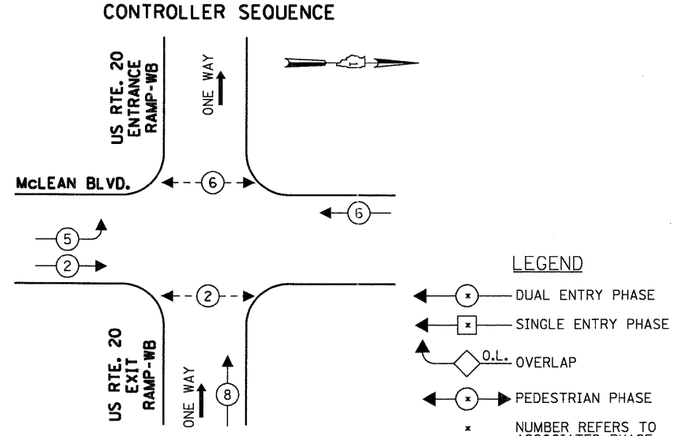

TEMPORARY PHASE DESIGNATION DIAGRAM

STAGE 1B

LEGEND

- DUAL ENTRY PHASE
- SINGLE ENTRY PHASE
- O.L. OVERLAP
- PEDESTRIAN PHASE
- NUMBER REFERS TO ASSOCIATED PHASE

TEMPORARY EMERGENCY VEHICLE PREEMPTION SEQUENCE

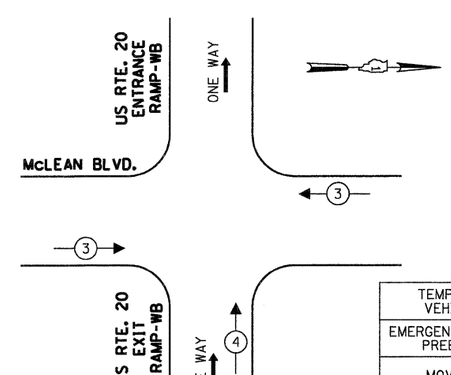

STAGE 1B

THE TRAFFIC SIGNAL CONTROL EQUIPMENT FOR THIS PROJECT SHALL BE "EAGLE" TO MATCH THE EXISTING ADJACENT SYSTEM.

TEMPORARY EMERGENCY VEHICLE PREEMPTORS		
EMERGENCY VEHICLE PREEMPTOR	3	4
MOVEMENT	← →	↑

FILE NAME = $FILEL$	USER NAME = $USER$	DESIGNED - PKG	REVISED -
		DRAWN - MAA, EA	REVISED -
	PLOT SCALE = $SCALE$	CHECKED - PKG	REVISED -
	PLOT DATE = $DATE$	DATE - 02/10/2012	REVISED -

STATE OF ILLINOIS
DEPARTMENT OF TRANSPORTATION

TEMPORARY TRAFFIC SIGNAL INSTALLATION, TEMPORARY CABLE PLAN, TEMPORARY PHASE DESIGNATION DIAGRAM, AND TEMPORARY EMERGENCY VEHICLE PREEMPTION SEQUENCE
McLEAN BOULEVARD AT NORTH RAMPS OF US RTE. 20
STAGE IB (SHEET 4 OF 11)

SCALE: 1"=20' | SHEET NO. OF SHEETS | STA. TO STA.

F.A.P. RTE.	SECTION	COUNTY	TOTAL SHEETS	SHEET NO.
345	8R-R	KANE	794	412
		CONTRACT NO. 60H45		
FED. ROAD DIST. NO. _	ILLINOIS	FED. AID PROJECT		