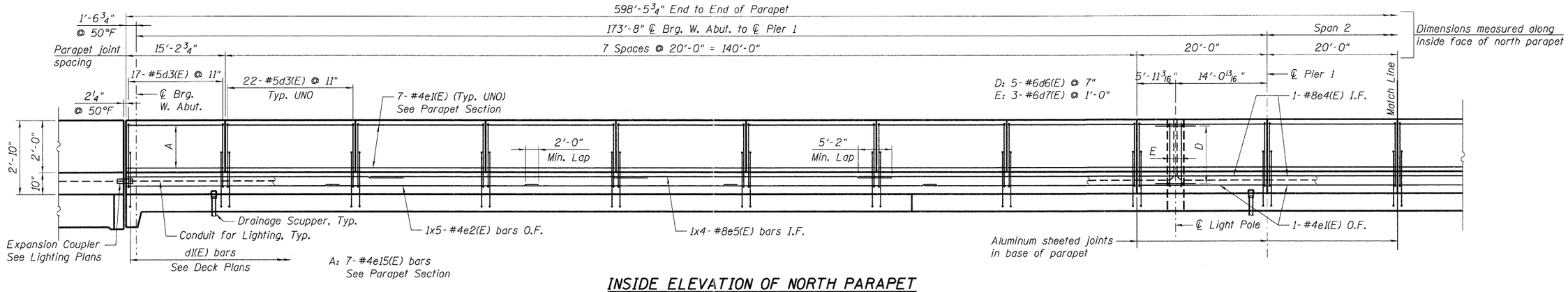

INSIDE ELEVATION OF NORTH PARAPET

(Looking North)

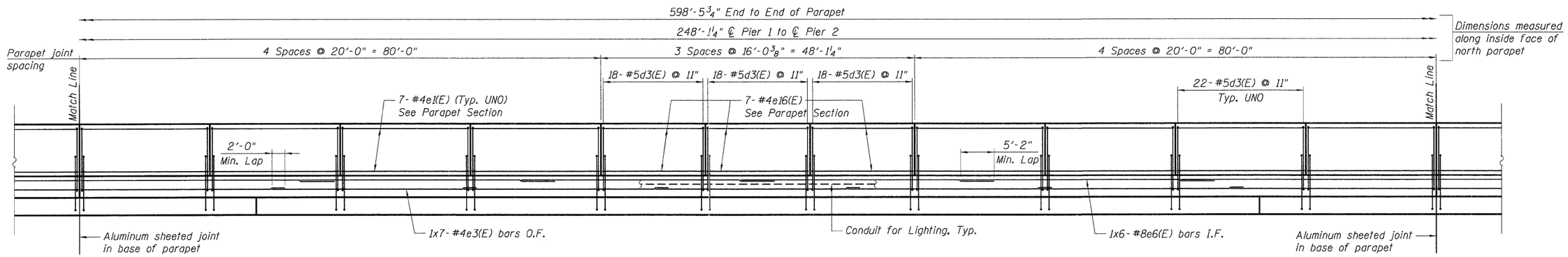

INSIDE ELEVATION OF NORTH PARAPET

(Looking North)

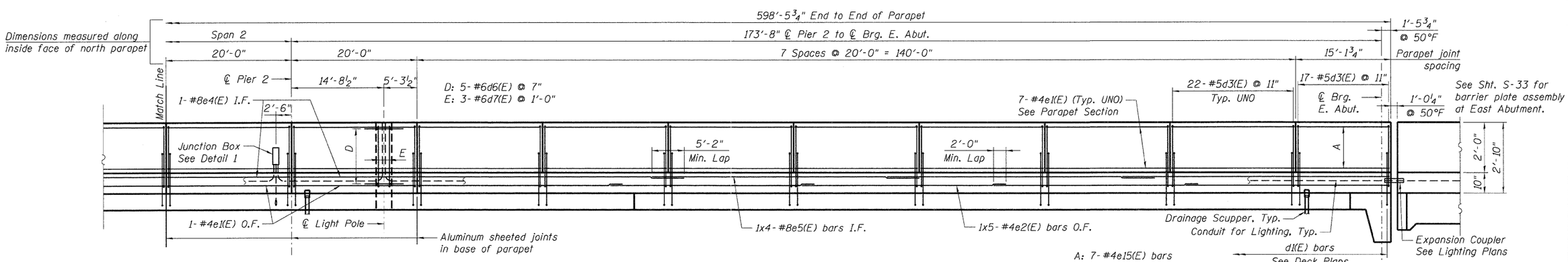

INSIDE ELEVATION OF NORTH PARAPET

(Looking North)

Note:

See Sht. S-17 for notes.

FILE NAME = $FILEL$	USER NAME = $USER$	DESIGNED - MDB	REVISED -	STATE OF ILLINOIS DEPARTMENT OF TRANSPORTATION US 20 OVER MCLEAN BOULEVARD	NORTH PARAPET ELEVATIONS	F.A.P. RTE.	SECTION	COUNTY	TOTAL SHEETS	SHEET NO.
		DRAWN - MDB	REVISED -			345	8R-R	KANE	794	493
TENG & ASSOCIATES, INC. ENGINEERS/ARCHITECTS/PLANNERS CHICAGO, ILLINOIS	PLOT SCALE = $SCALE$	CHECKED - PK	REVISED -			SN 045-0077		CONTRACT NO. 60H45		
	PLOT DATE = $DATE$	DATE - 12/16/11	REVISED -		SCALE: / SHEET NO. S-21 OF S-62 / STATION 98+32.18	FED. ROAD DIST. NO. 7	ILLINOIS	FED. AID PROJECT		

..\045-0077-60H45-001-SUPER.DGN ..\ALLSNUM-60H45-001-BORDER.DGN ..\045-0077-60H45-001-SUPER.DGN ..\045-0077-60H45-001-SUPER.DGN
12-12-2011 10:38:55 BHUZERKA ..\FS-02441\HAVILLJ\TRANS_87\22022\21379-001\STRUCTURE\CHO\60H45\045-0077\SHEET\045-0077-60H45-005-SUPER.SHT.DGN