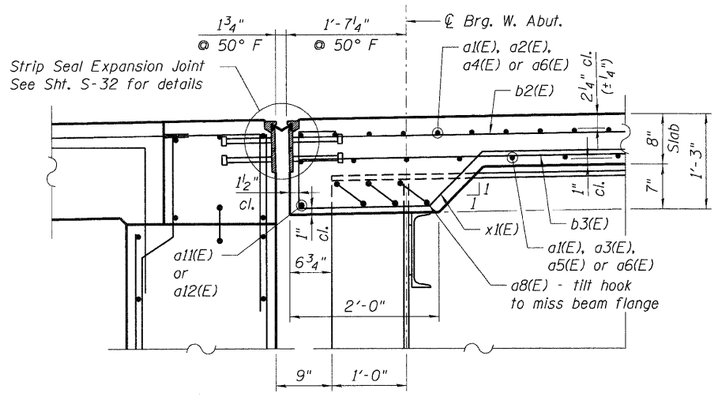

SECTION B-B

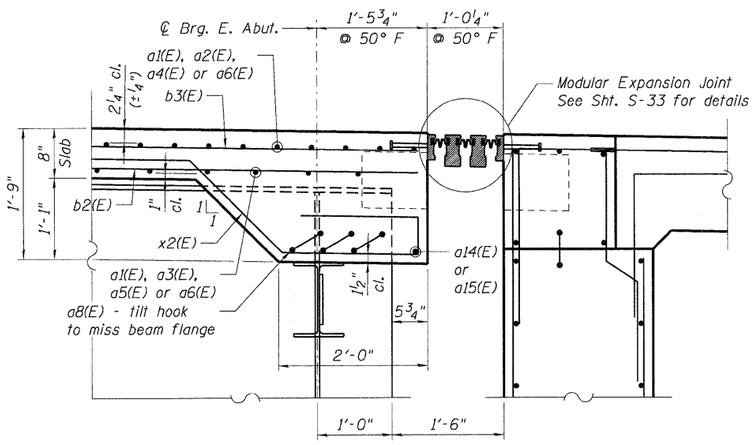

SECTION C-C

(at support boxes)

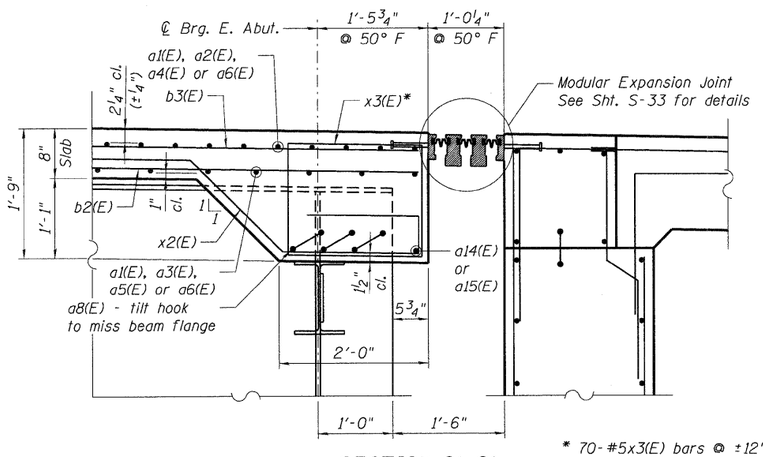

SECTION C'-C'

(between support boxes)

* 70-#5x3(E) bars @ ±12"
Locate in spaces between support boxes, girders, and deck sides.

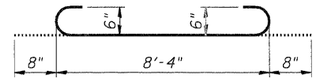

a8(E) BAR

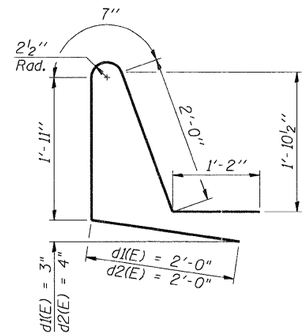

d1(E) & d2(E) BARS

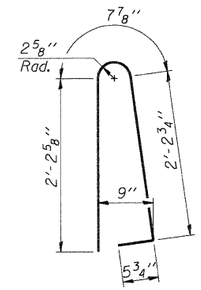

d3(E) BAR

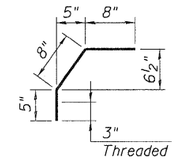

d4(E) BAR

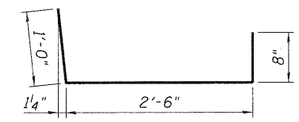

d5(E) BAR

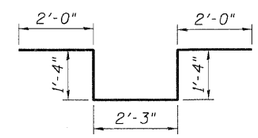

d6(E) BAR

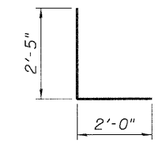

d7(E) BAR

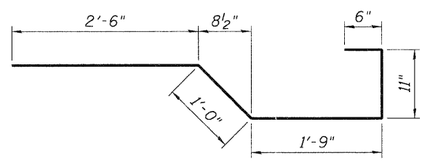

x1(E) BAR

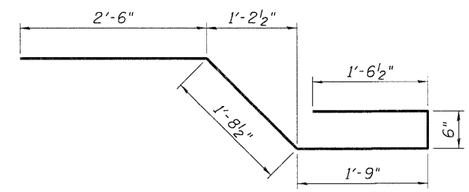

x2(E) BAR

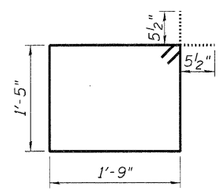

x3(E) BAR

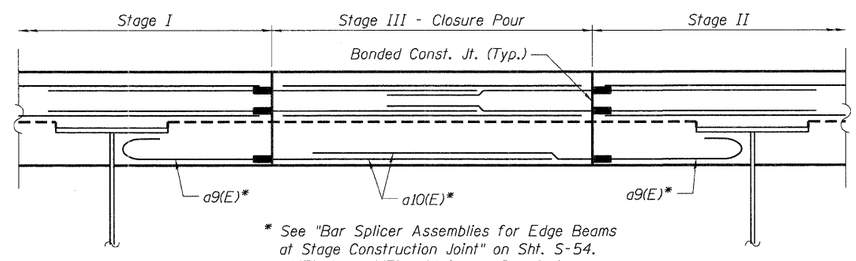

* See "Bar Splicer Assemblies for Edge Beams at Stage Construction Joint" on Sht. S-54.
a9(E) and a10(E) paid for as Bar Splicers.

SECTION D-D

Edge Beam Closure Pours
(Looking East)

Note:

See Sht. S-17 for notes.

BAR LIST

Bar	No.	Size	Length	Shape
a1(E)	2189	#5	32'-0"	
a2(E)	1329	#5	27'-3"	
a3(E)	860	#5	26'-4"	
a4(E)	1329	#5	39'-5"	
a5(E)	860	#5	38'-6"	
a6(E)	2189	#5	4'-0"	
a7(E)	2647	#6	6'-6"	
a8(E)	60	#6	9'-8"	
a11(E)	2	#6	28'-3"	
a12(E)	1	#6	36'-2"	
a13(E)	96	#5	2'-0"	
a14(E)	2	#6	29'-9"	
a15(E)	1	#6	39'-4"	
b1(E)	3948	#5	30'-0"	
b2(E)	188	#5	24'-0"	
b3(E)	188	#5	10'-3"	
b4(E)	1010	#6	37'-6"	
d1(E)	655	#5	7'-8"	
d2(E)	666	#5	7'-8"	
d3(E)	1329	#5	5'-7"	
d4(E)	1334	#5	1'-9"	
d5(E)	1334	#5	4'-2"	
d6(E)	20	#6	8'-11"	
d7(E)	12	#6	4'-5"	
e1(E)	562	#4	19'-9"	
e2(E)	10	#4	32'-7"	
e3(E)	7	#4	31'-5"	
e4(E)	16	#8	19'-9"	
e5(E)	8	#8	42'-8"	
e6(E)	6	#8	39'-0"	
e7(E)	10	#4	33'-2"	
e8(E)	7	#4	32'-0"	
e9(E)	8	#8	43'-4"	
e10(E)	6	#8	39'-7"	
e11(E)	20	#4	32'-11"	
e12(E)	14	#4	31'-8"	
e13(E)	16	#8	43'-0"	
e14(E)	12	#8	39'-4"	
e15(E)	14	#4	14'-10"	
e16(E)	21	#4	15'-9"	
e17(E)	14	#4	17'-6"	
e18(E)	21	#4	17'-0"	
e19(E)	14	#4	16'-3"	
e20(E)	21	#4	16'-5"	
x1(E)	88	#5	6'-8"	
x2(E)	94	#5	8'-0"	
x3(E)	70	#5	7'-3"	

BILL OF MATERIAL

Item	Unit	Total
Concrete Superstructure	Cu. Yd.	1,856.5
Bridge Deck Grooving	Sq. Yd.	6,120
Protective Coat	Sq. Yd.	7,384
Reinforcement Bars, Epoxy Coated	Pound	492,970