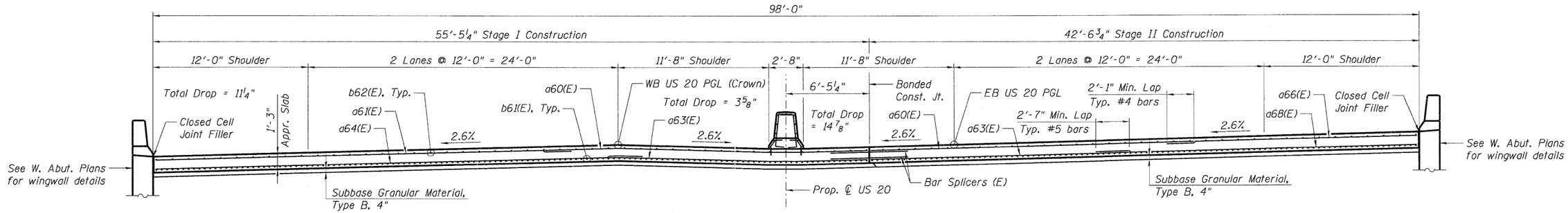

SECTION A-A

(Looking East)

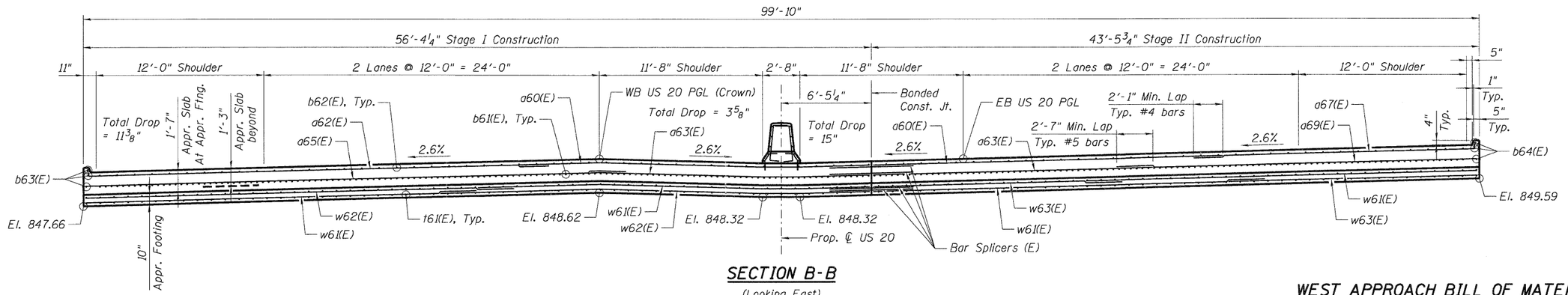

SECTION B-B

(Looking East)

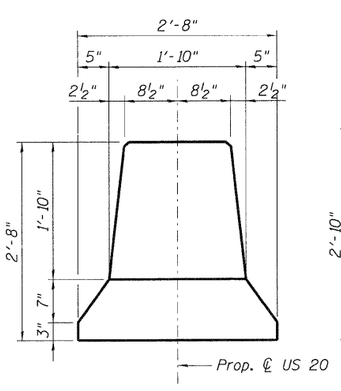

MEDIAN BARRIER DETAIL

(Showing Dimensions at end of approach)

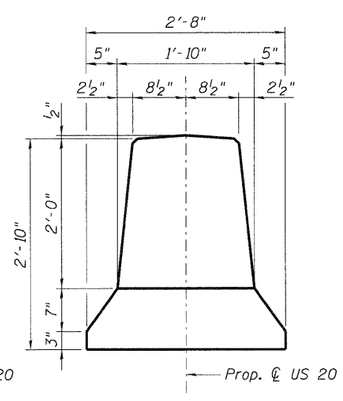

MEDIAN BARRIER DETAIL

(Showing Typical Dimensions)

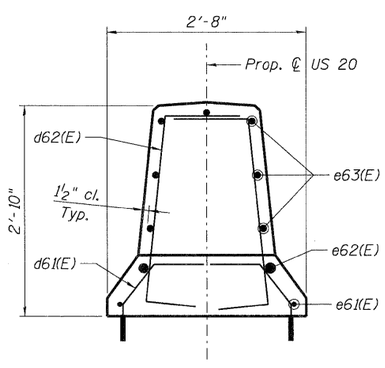

MEDIAN BARRIER DETAIL

(Showing Reinforcement)

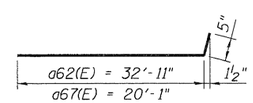

d62(E) & d67(E) bars

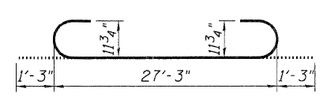

b61(E) bars

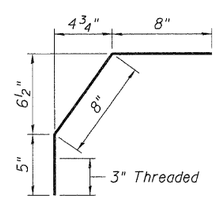

d61(E) bars

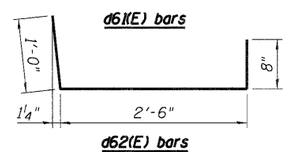

d62(E) bars

WEST APPROACH BAR LIST

Bar	No.	Size	Length	Shape
a60(E)	50	#4	25'-0"	
a61(E)	14	#4	32'-3"	
a62(E)	11	#4	33'-4"	
a63(E)	92	#5	20'-0"	
a64(E)	26	#5	37'-9"	
a65(E)	20	#5	38'-8"	
a66(E)	17	#4	19'-4"	
a67(E)	8	#4	20'-6"	
a68(E)	31	#5	24'-10"	
a69(E)	15	#5	25'-9"	
b61(E)	235	#9	29'-9"	
b62(E)	79	#4	29'-8"	
b63(E)	3	#4	12'-8"	
b64(E)	3	#4	9'-2"	
d61(E)	72	#5	1'-9"	
d62(E)	72	#5	4'-2"	
e61(E)	2	#4	31'-3"	
e62(E)	2	#8	31'-3"	
e63(E)	14	#4	15'-5"	
t61(E)	202	#4	9'-8"	
w61(E)	80	#5	28'-0"	
w62(E)	40	#5	30'-9"	
w63(E)	40	#5	17'-10"	

WEST APPROACH BILL OF MATERIAL

Item	Unit	Total
Concrete Structures	Cu. Yd.	30.8
Concrete Superstructure	Cu. Yd.	152.4
Bridge Deck Grooving	Sq. Yd.	320
Protective Coat	Sq. Yd.	363
Reinforcement Bars, Epoxy Coated	Pound	38,510

Notes:

1. Work this sheet with Sht. S-26.
2. The Approach Slab and Median Barrier shall be paid for as Concrete Superstructure.
3. The Approach Footing shall be paid for as Concrete Structures.
4. Reinforcement shall be paid for as Reinforcement Bars, Epoxy Coated.
5. Cost of Subbase Granular Material and Closed Cell Joint Filler included with Concrete Superstructure.
6. Cost of excavation for Approach Footing included with Concrete Structures.
7. Cost of expansion anchors included with Reinforcement Bars, Epoxy Coated.
8. For v31(E) bar details, see Sht. S-44.
8. For Bar Splicer details, see Sht. S-54.
9. For Porous Granular Embankment, Special and drainage treatment details, see Sht. S-3.
10. The Approach Footing maximum applied service bearing pressure (Qmax) = 2.0 ksf.
11. For median barrier joint details, see Sht. S-24.