STANDARD DESIGN FOR MILE POST

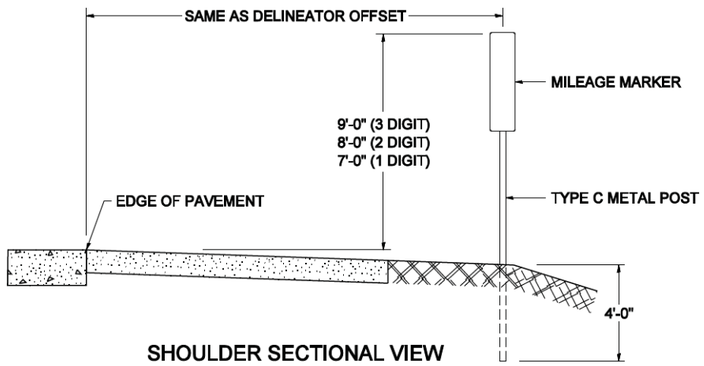

SHOULDER SECTIONAL VIEW

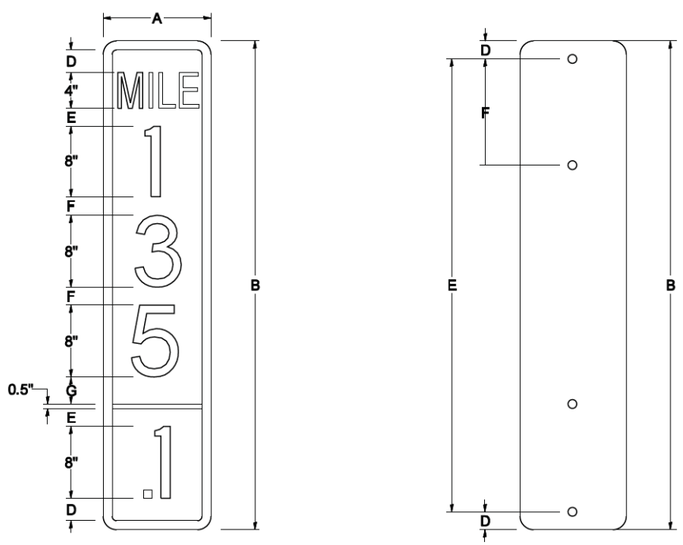

SIGN SIZE	DIMENSIONS							
	A	B	C	D	E	F	G	DIGIT
12 x 24	12.0	24.0	1.5	1.5	1.5	N/A	1.5	1
12 x 36	12.0	36.0	1.5	2.0	2.0	2.0	1.5	2
12 x 48	12.0	48.0	1.5	2.5	2.0	2.0	2.5	3

BLANK	A	B	C	D	E	F
B9-1224	12.0	24.0	1.5	2.0	20.0	N/A
B9-1236	12.0	36.0	1.5	2.0	32.0	12.0
B9-1248	12.0	48.0	1.5	2.0	44.0	12.0

SIGN SIZE	SERIES					BORDER	BLANK STD.
	LINES						
	1	2	3	4	5		
12 x 24	4C	8D	4C	N/A	N/A	0.5	B9-1224
12 x 36	4C	8D	8D	4C	N/A	0.5	B9-1236
12 x 48	4C	8D	8D	8D	4C	0.5	B9-1248

BORDER AND RADIUS LAYOUT

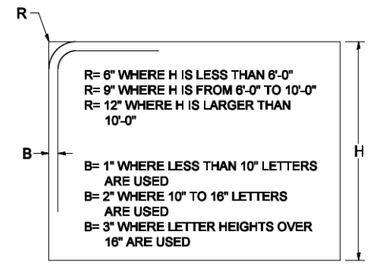

MAJOR GUIDE SIGN LAYOUT

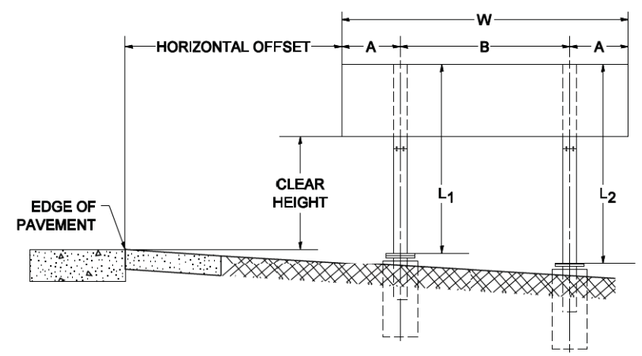

NUMBER OF STEEL SUPPORTS	A	B
2	.2 W	.6 W
3	.15 W	.35 W
4	.125 W	.25 W
5	.1 W	.2 W

*L_1 IS THE LENGTH OF SUPPORT, NOT INCLUDING THE STUB PROJECTION, CLOSEST TO THE EDGE OF THE PAVEMENT.

A IS THE DISTANCE FROM THE SIGN EDGE TO THE CENTERLINE OF THE NEAREST SUPPORT. *B* IS THE DISTANCE BETWEEN CENTERLINES OF SUPPORTS.

GORE SIGNS

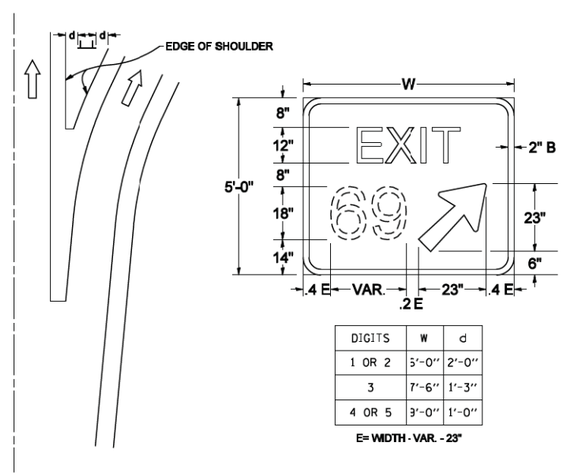

DIGITS	W	d
1 OR 2	3'-0"	2'-0"
3	7'-6"	1'-3"
4 OR 5	9'-0"	1'-0"

E= WIDTH - VAR. - 23"

STANDARD ARROWS FOR INTERSTATE GUIDE SIGNS

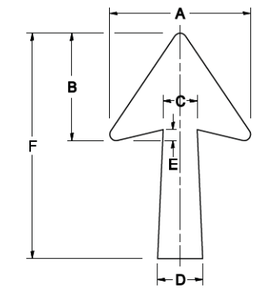

ARROW SYMBOL	A	B	C	D	E	F	R
24 1/4 x 15 1/8	15 1/8	11 9/16	3 3/4	5	1 5/16	24 1/4	15/16
29 1/4 x 18 1/4	18 1/4	14	4 1/2	6	1 1/2	29 1/4	3/4
35 5/8 x 22 1/4	22 1/4	17	5 3/8	7 1/8	1 3/4	35 5/8	1
18 1/4 x 11 1/4	11 1/4	8 3/4	3 1/8	3 7/8		18 1/4	

NOTE: D & F ARE RECOMMENDED DIMENSIONS. TAPER SHOULD BE HELD CONSTANT FOR LONGER OR SHORTER SHAFT LENGTHS

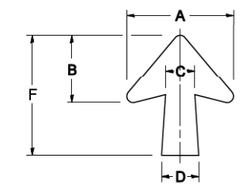

ARROW SYMBOL	A	B	C	D	E	F	R
17 1/4 x 14 1/4	14 1/4	9 13/16	3 3/8	4 1/2	15/16	17 1/4	3/4
20 1/4 x 17 1/4	17 1/4	11 3/4	4 3/8	5 5/8	1 1/2	20 1/4	
25 x 21 7/8	21 7/8	14 1/4	5	6 3/4	1 3/4	25	1
9 9/16 x 8 7/16	8 7/16	5 7/16	2 5/16	2 15/16		9 9/16	1/2

DOWN ARROWS

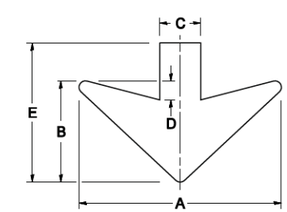

ARROW SYMBOL	A	B	C	D	E	R
16 1/2 x 24	24	12	5	1 1/2	16 1/2	3/4
22 x 32	32	16	6 1/2	3	22	1

*F.A.I. 290 (INTERSTATE 290)
*F.A.U. 341 (IL ROUTE 53)

COPYRIGHT © 2011 BY BAXTER & WOODMAN INC.
STATE OF ILLINOIS - PROFESSIONAL DESIGN FIRM
LICENSE NO.- 184-001121- EXPIRES 4/30/2013
2/6/2012 3:25:59 PM
...\Standards\plotdrv\pdf-EDOT.plt
...\PLOTS\10053-WO-27-BRK.tbl
\\corpbaxwood.com\projects\CrystalLake\IDOT\10053-\40-Design\WO-27 IL-53 Signing\CADD-SURVEY\DRAWINGS\DGNS\10053-WO-27-DISTRICT ONE DETAILS - TC.dgn

FILE NAME = tc27.dgn	USER NAME = gaglianobt	DESIGNED -	REVISED - 02-04-2009
		DRAWN -	REVISED -
	PLOT SCALE = 50.0000 ' / IN.	CHECKED -	REVISED -
	PLOT DATE = 2/4/2009	DATE - 03-08-1984	REVISED -

STATE OF ILLINOIS
DEPARTMENT OF TRANSPORTATION

MILE POST MARKERS – GORE SIGNS
MAJOR GUIDE SIGN LAYOUT – ARROWS

SCALE: NONE | SHEET NO. 1 OF 1 SHEETS | STA. | TO STA.

F.A. RTE.	SECTION	COUNTY	TOTAL SHEETS	SHEET NO.
*	2011-024-SG	DuPAGE/COOK	132	132
	TC-27 (TS-2341-1)	CONTRACT NO. 60P24		

FED. ROAD DIST. NO. 1 | ILLINOIS | FED. AID PROJECT