ROUTE	SECTION	COUNTY	TOTAL SHEETS	SHEET NUMBER
VARIOUS	2011-227-I	MCHENRY	53	47

CONTRACT NO. 60R91

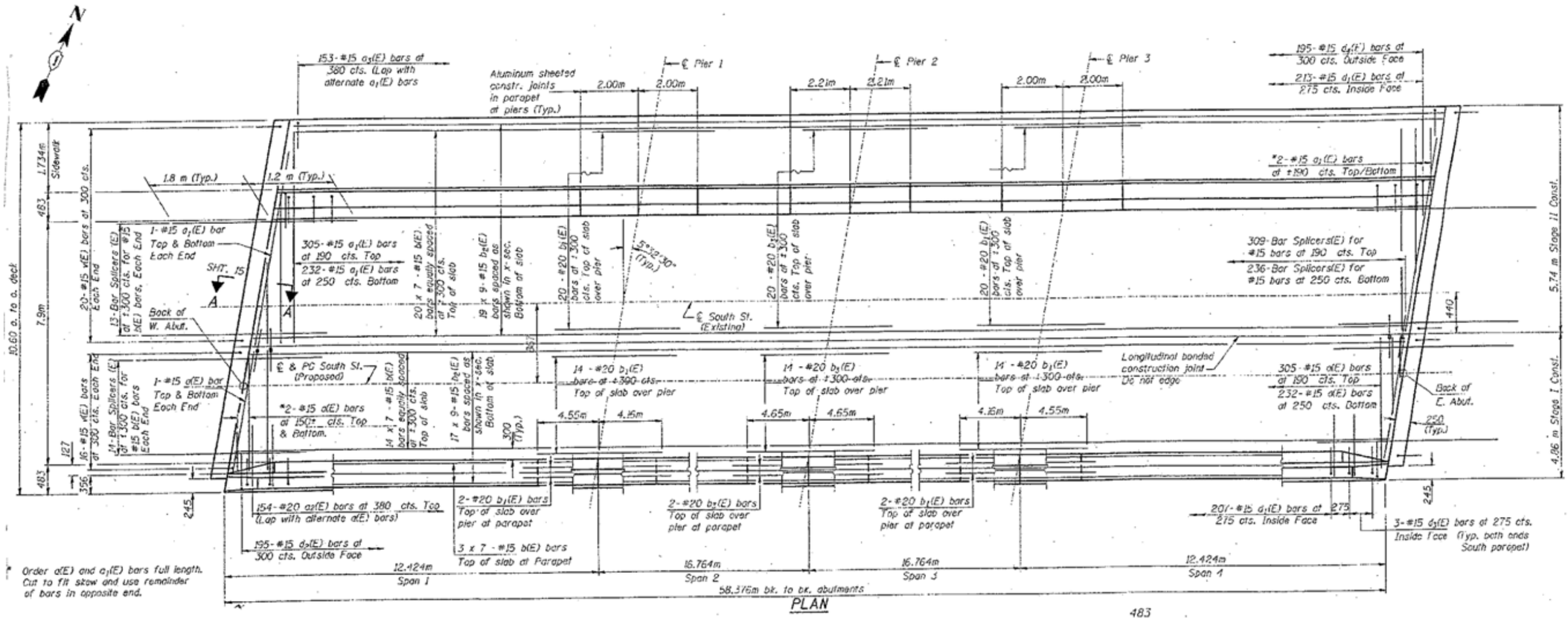

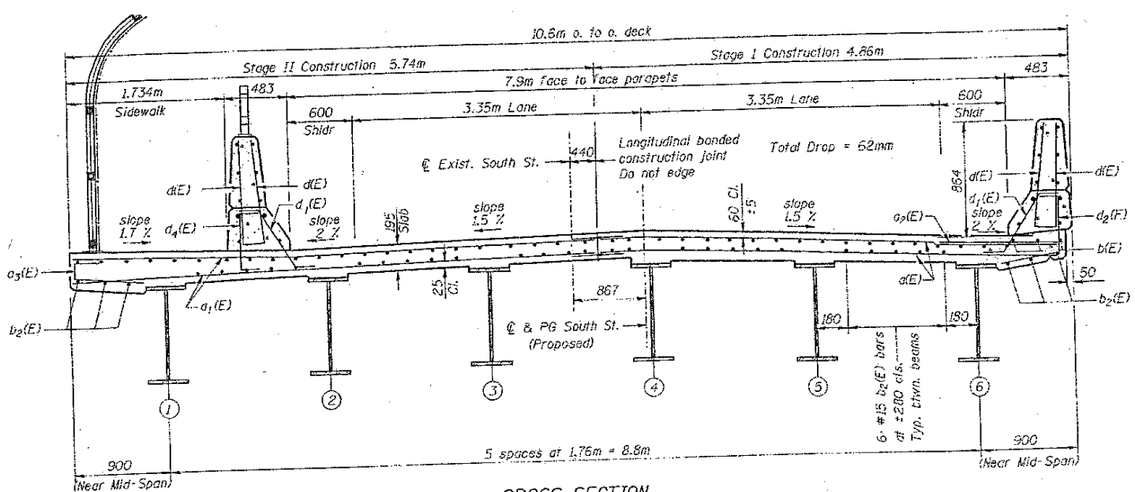

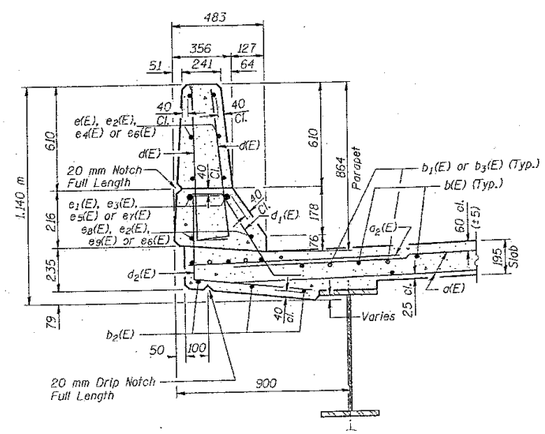

FOR INFORMATION ONLY

ILLINOIS DEPARTMENT OF TRANSPORTATION

EXISTING PLAN & CROSS SECTION
LOCATION 19 (SN 056-3015)
SOUTH STREET OVER US 14
SHEET 1 OF 1