Ⓒ EXISTING TYPICAL CROSS SECTION

STATION Ⓑ 133+78.69 TO STATION 136+85.00 Ⓓ

RESURFACING OMISSION:
STA. 136+85.00 TO STA. 149+62.00

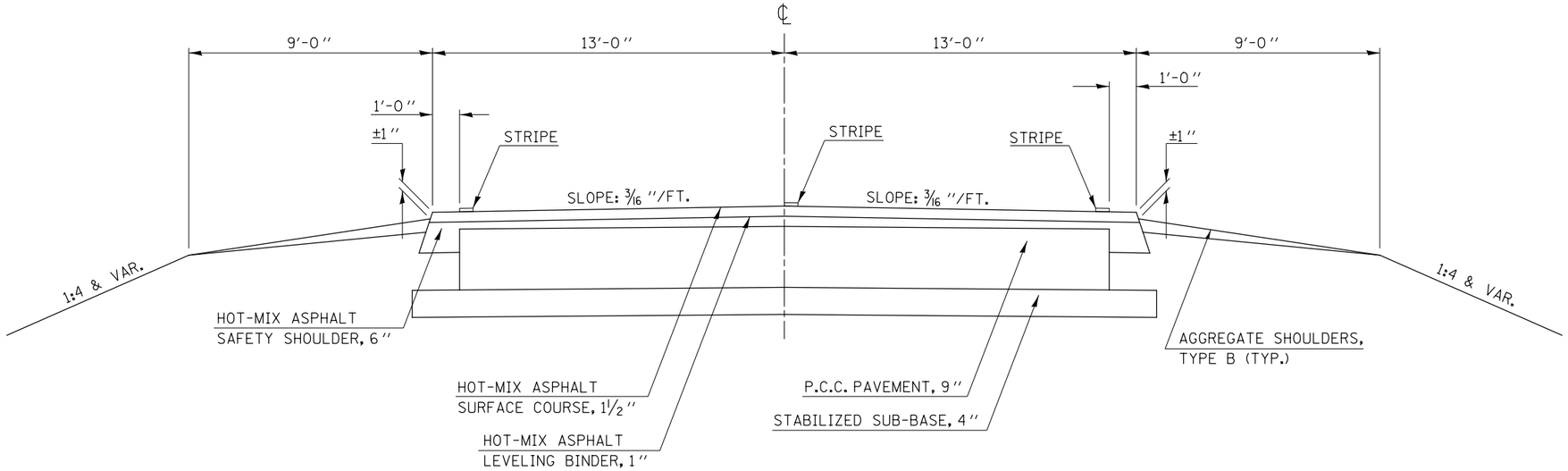

③ PROPOSED TYPICAL CROSS SECTION

STATION ② 133+78.69 TO STATION 136+85.00 ④

RESURFACING OMISSION:
STA. 136+85.00 TO STA. 149+62.00

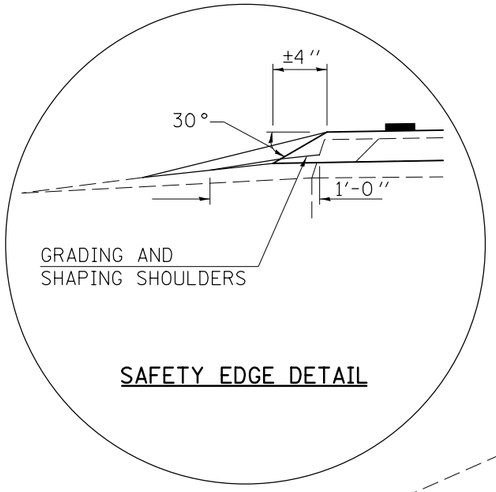

SAFETY EDGE DETAIL

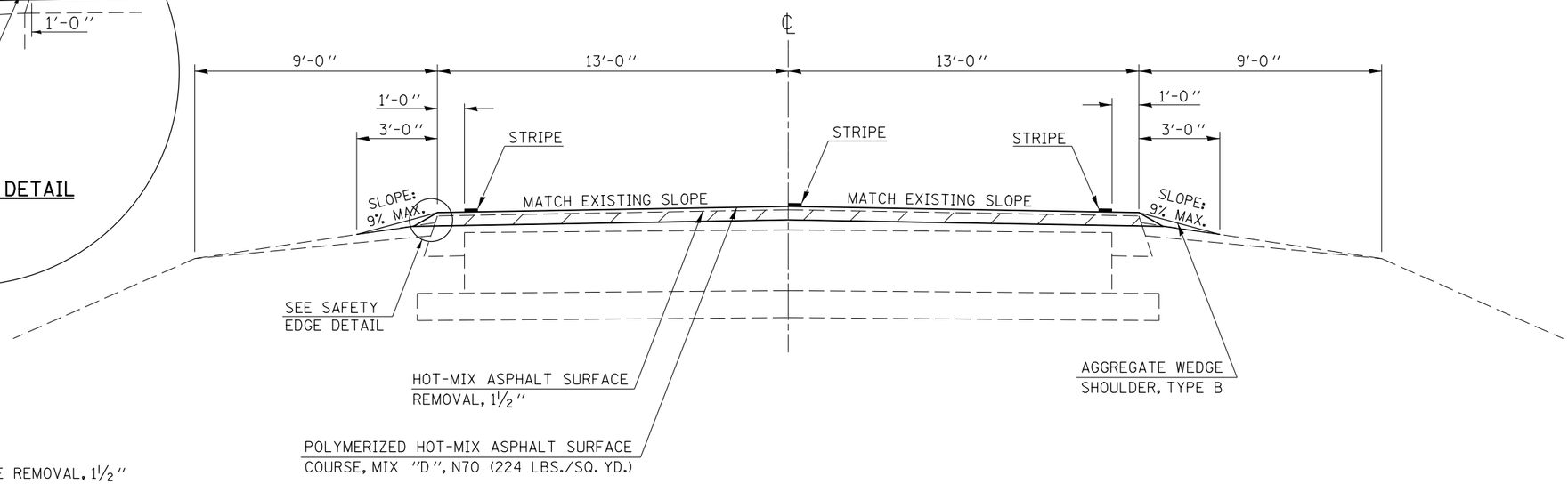

HMA SURFACE REMOVAL, 1 1/2"

FILE NAME = c:\pw_work\pwidot\piersonbr\d0249274\D570874-sht-Typicals.dgn	USER NAME = piersonbr	DESIGNED - SEL	REVISED -	STATE OF ILLINOIS DEPARTMENT OF TRANSPORTATION	TYPICAL CROSS SECTIONS			F.A.S. RTE.	SECTION	COUNTY	TOTAL SHEETS	SHEET NO.
		DRAWN - BBP	REVISED -					533	(10-34,HB-5,106)RS-1	Champaign	26	8
	PLOT SCALE = 40.0000 ' / in.	CHECKED -	REVISED -							CONTRACT NO. 70874		
	PLOT DATE = 1/27/2012	DATE - 03/03/11	REVISED -		SCALE: NONE	SHEET NO. 3 OF 4 SHEETS	STA. TO STA.		ILLINOIS FED. AID PROJECT			