(D) EXISTING TYPICAL CROSS SECTION

STATION	TO	STATION
(C) 149+62.00		162+24.00

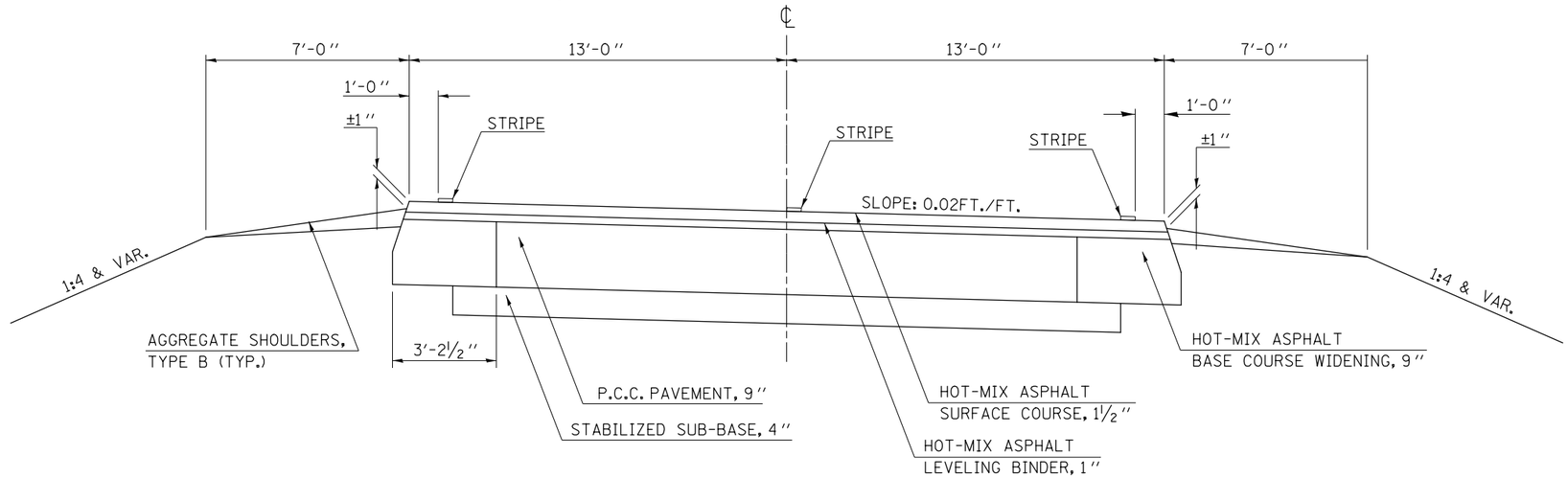

(4) PROPOSED TYPICAL CROSS SECTION

STATION	TO	STATION
(3) 149+62.00		162+24.00

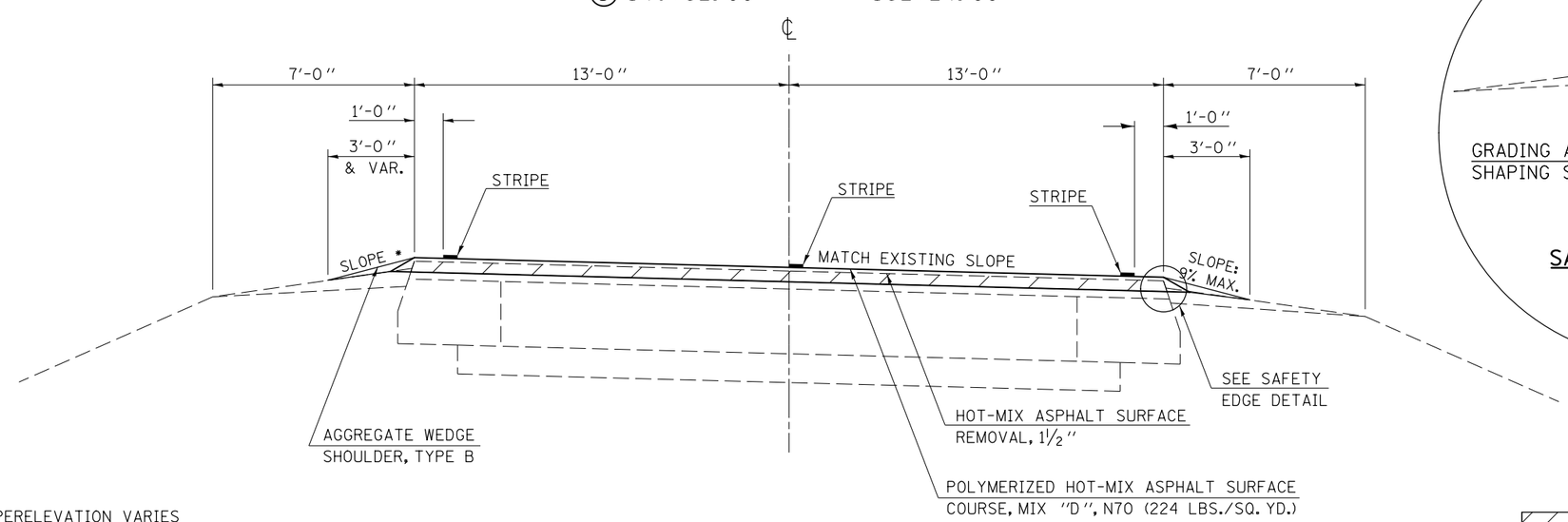

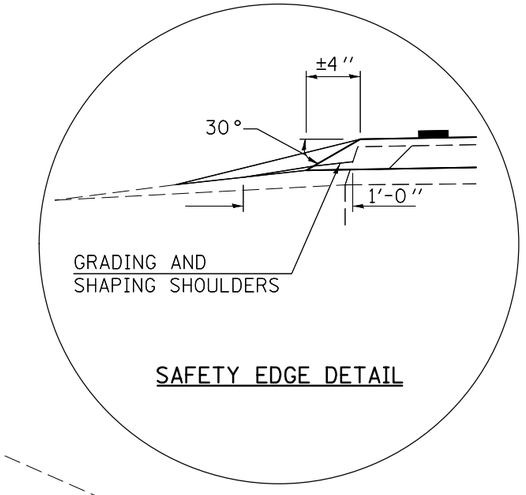

SAFETY EDGE DETAIL

* SHOULDER SLOPE THROUGH SUPERELEVATION VARIES FROM 8% - 9% MAXIMUM SLOPE TO MAINTAIN 10% MAXIMUM ROLLOVER CRITERIA.

HMA SURFACE REMOVAL, 1½"

FILE NAME = c:\pw_work\pwidot\piersonbr\d0249274\D570874-sht-Typicals.dgn	USER NAME = piersonbr	DESIGNED - SEL	REVISED -	STATE OF ILLINOIS DEPARTMENT OF TRANSPORTATION	TYPICAL CROSS SECTIONS	F.A.S. RTE. 533	SECTION (10-34,HB-5,106)RS-1	COUNTY Champaign	TOTAL SHEETS 26 / SHEET NO. 9
	PLOT SCALE = 40.0000 ' / in.	DRAWN - BBP	REVISED -					CONTRACT NO. 70874	
	PLOT DATE = 1/27/2012	CHECKED -	REVISED -						
		DATE - 03/03/11	REVISED -		SCALE: NONE / SHEET NO. 4 OF 4 SHEETS / STA. TO STA.			ILLINOIS FED. AID PROJECT	