(1) EXISTING TYPICAL CROSS SECTION

F.A.P. ROUTE 730 (U.S. 51 BUSINESS)

LOCATION #6

	STATION	TO	STATION
S. B.	249+88.00		258+01.05 (2)

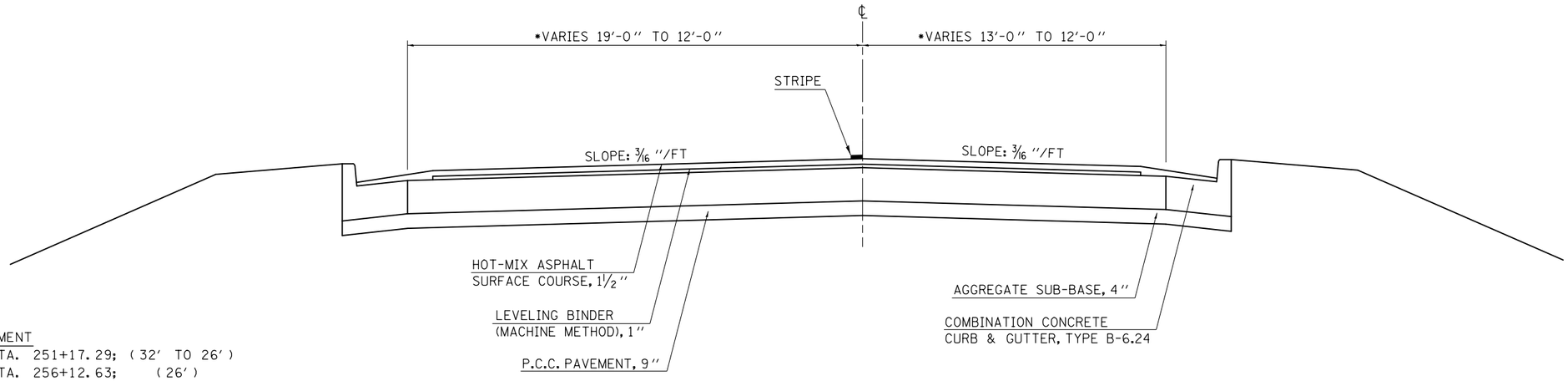

***NOTE:**

VARIABLE WIDTH PAVEMENT

STA. 250+17.29 TO STA. 251+17.29; (32' TO 26')
STA. 251+17.29 TO STA. 256+12.63; (26')
STA. 256+12.63 TO STA. 258+01.07; (26' TO 24')

(2) EXISTING TYPICAL CROSS SECTION

F.A.P. ROUTE 730 (U.S. 51 BUSINESS)

LOCATION #6

	STATION	TO	STATION
N. B.	257+79.97		316+00.00
(1) S. B.	258+01.05		316+00.00

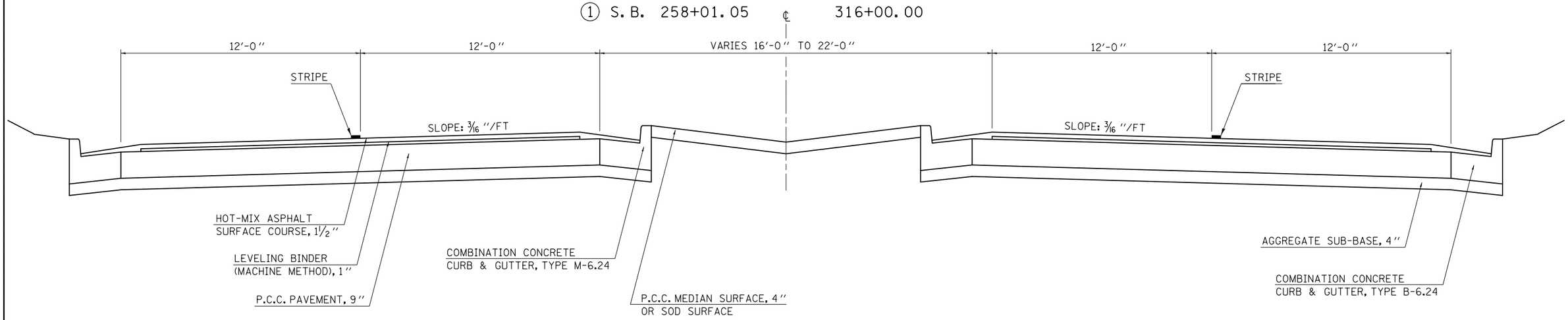

* D5 CRACK & JOINT SEAL 2012-1
** DEWITT, MCLEAN, PIATT

FILE NAME = c:\pw_work\pwidot\piersonbr\d0287939\D570932-sht-typical.dgn	USER NAME = piersonbr	DESIGNED - GAE	REVISED -
		DRAWN - BBP	REVISED -
	PLOT SCALE = 40.0000 ' / in.	CHECKED -	REVISED -
	PLOT DATE = 1/25/2012	DATE - 12/01/11	REVISED -

STATE OF ILLINOIS
DEPARTMENT OF TRANSPORTATION

EXISTING TYPICAL CROSS SECTIONS
LOCATION #6

SCALE: NONE | SHEET 1 OF 2 SHEETS | STA. TO STA.

F.A. RTE.	SECTION	COUNTY	TOTAL SHEETS	SHEET NO.
VAR.	*	**	36	23

CONTRACT NO. 70932

ILLINOIS FED. AID PROJECT