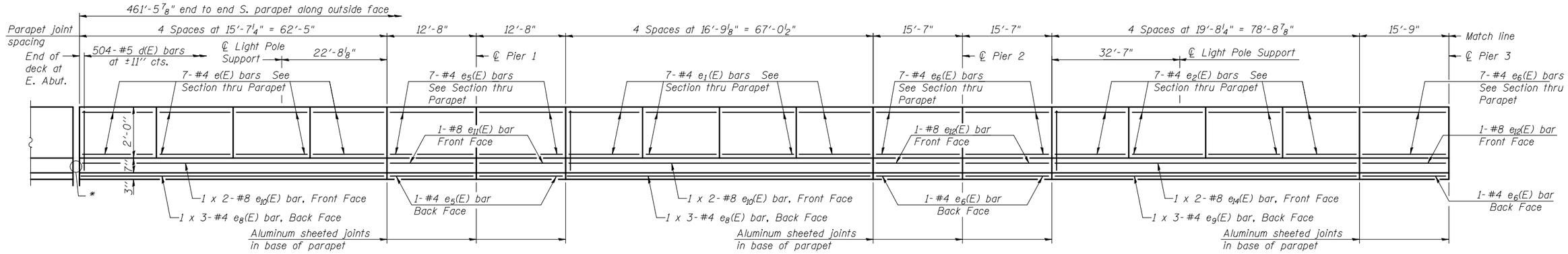

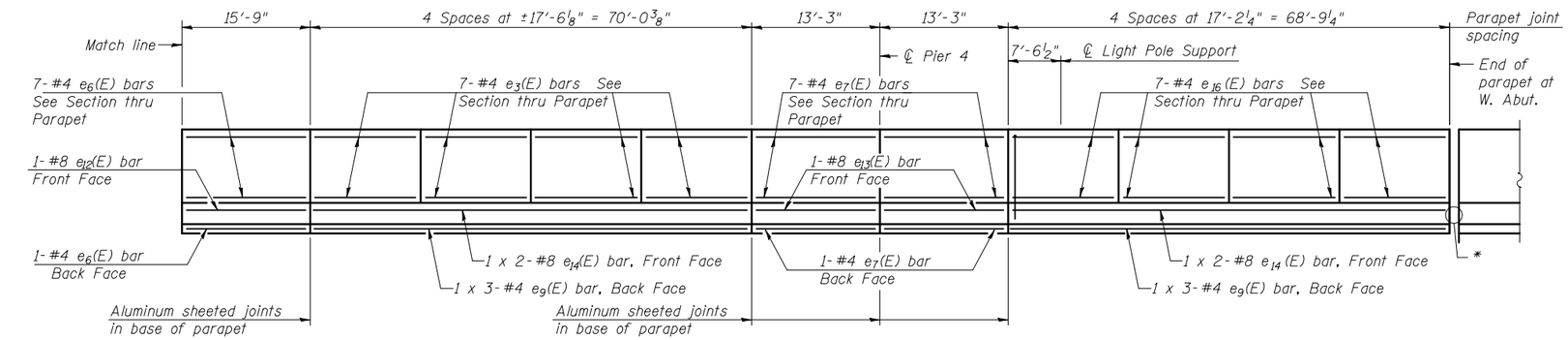

* Conduit Expansion/Deflection Coupling. See Lighting Plan Details.

** 2" PVC Conduit embedded in South Parapet not shown for clarity.

INSIDE ELEVATION OF SOUTH PARAPET **

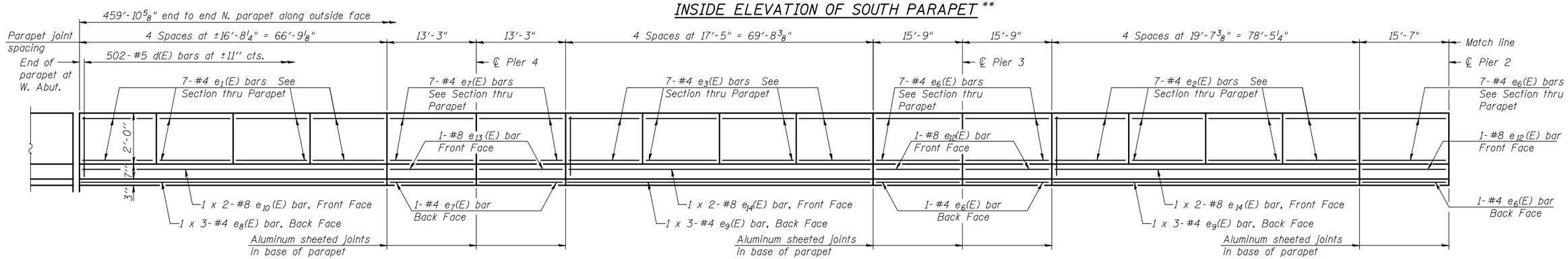

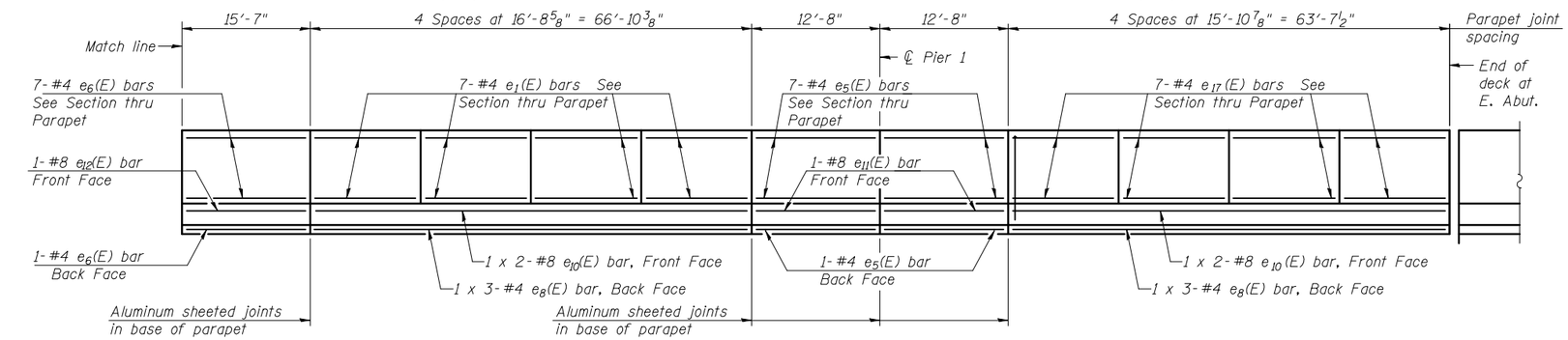

INSIDE ELEVATION OF NORTH PARAPET

MINIMUM BAR LAP

#4 bar = 2'-0"
#8 bar = 5'-2"

Coombe-Bloxdorf P.C.
-CIVIL ENGINEERS-
-STRUCTURAL ENGINEERS-
-LAND SURVEYORS-
Design Firm License No. 184-002703

FILE NAME = $FILEL$	USER NAME = $USER$	DESIGNED - GB	REVISED -	STATE OF ILLINOIS DEPARTMENT OF TRANSPORTATION	SUPERSTRUCTURE DETAILS STRUCTURE NO. 039-0076 (WB)	F.A.P. RTE. 331	SECTION (12-1)B-1
		CHECKED - MCB	REVISED -			COUNTY JACKSON	TOTAL SHEETS 200
	PLOT SCALE = $SCALE$	DRAWN - MML	REVISED -			SHEET NO. 128	CONTRACT NO. 78056
CB PROJECT NO. 08024-2	PLOT DATE = $DATE$	CHECKED - MCB	REVISED -		SHEET NO. 16 OF 53 SHEETS	ILLINOIS	FED. AID PROJECT