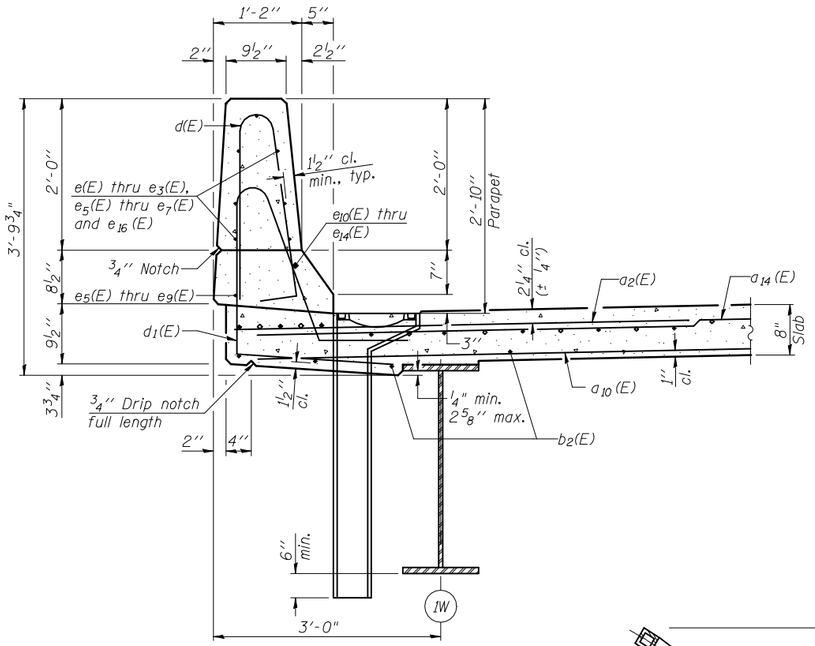


SECTION THRU SOUTH PARAPET

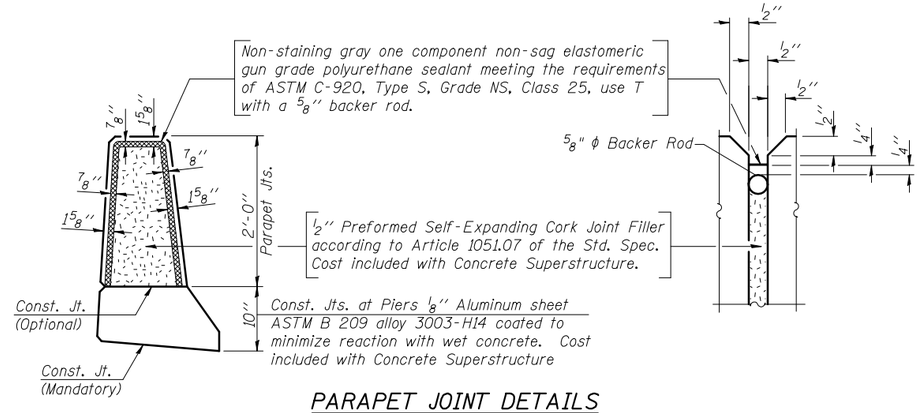


PARAPET JOINT DETAILS

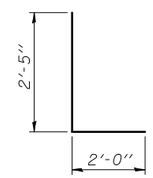


BAR d2(E)

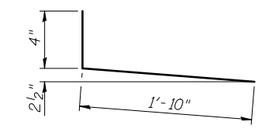


BAR d5(E)

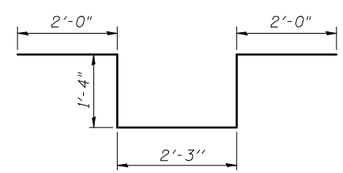


BAR d3(E)

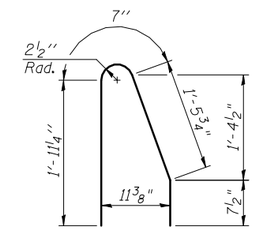


BAR d4(E)

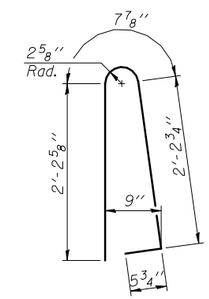


BAR d(E)

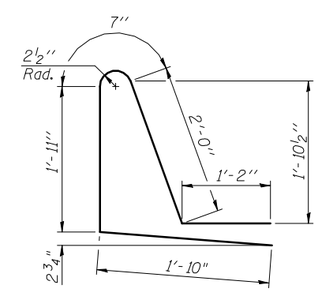


BAR d1(E)

## SUPERSTRUCTURE BILL OF MATERIAL

| Bar | No. | Size | Length | Shape |
|---|---|---|---|---|
| a2(E) | 1129 | #6 | 6'-6" | |
| a6(E) | 16 | #5 | 1'-6" | |
| a10(E) | 698 | #5 | 47'-10" | |
| a11(E) | 15 | #6 | 10'-5" | |
| a12(E) | 20 | #6 | 30'-11" | |
| a13(E) | 15 | #6 | 11'-2" | |
| a14(E) | 1117 | #5 | 48'-8" | |
| a15(E) | 1105 | #6 | 12'-8" | |
| | | | | |
| b(E) | 918 | #5 | 28'-1" | |
| b1(E) | 147 | #6 | 19'-7" | |
| b2(E) | 1064 | #5 | 26'-9" | |
| b4(E) | 147 | #6 | 20'-8" | |
| b5(E) | 294 | #6 | 23'-2" | |
| | | | | |
| d(E) | 1006 | #5 | 5'-7" | |
| d1(E) | 504 | #5 | 7'-6" | |
| d2(E) | 9 | #6 | 4'-5" | |
| d3(E) | 15 | #6 | 8'-11" | |
| d4(E) | 502 | #5 | 4'-8" | |
| d5(E) | 503 | #5 | 2'-2" | |
| | | | | |
| e(E) | 28 | #4 | 15'-3" | |
| e1(E) | 84 | #4 | 16'-4" | |
| e2(E) | 56 | #4 | 19'-3" | |
| e3(E) | 56 | #4 | 17'-1" | |
| e5(E) | 32 | #4 | 12'-4" | |
| e6(E) | 64 | #4 | 15'-3" | |
| e7(E) | 32 | #4 | 12'-11" | |
| e8(E) | 15 | #4 | 23'-10" | |
| e9(E) | 15 | #4 | 27'-7" | |
| e10(E) | 10 | #8 | 36'-3" | |
| e11(E) | 4 | #8 | 12'-4" | |
| e12(E) | 8 | #8 | 15'-3" | |
| e13(E) | 4 | #8 | 12'-11" | |
| e14(E) | 10 | #8 | 41'-11" | |
| e16(E) | 28 | #4 | 16'-8" | |
| e17(E) | 28 | #4 | 15'-6" | |
| | | | | |
| x(E) | 90 | #5 | 6'-5" | |
| | | | | |
| Reinforcement Bars, Epoxy Coated | | | Pound | 222,500 |
| Concrete Superstructure | | | Cu. Yds. | 701.7 |

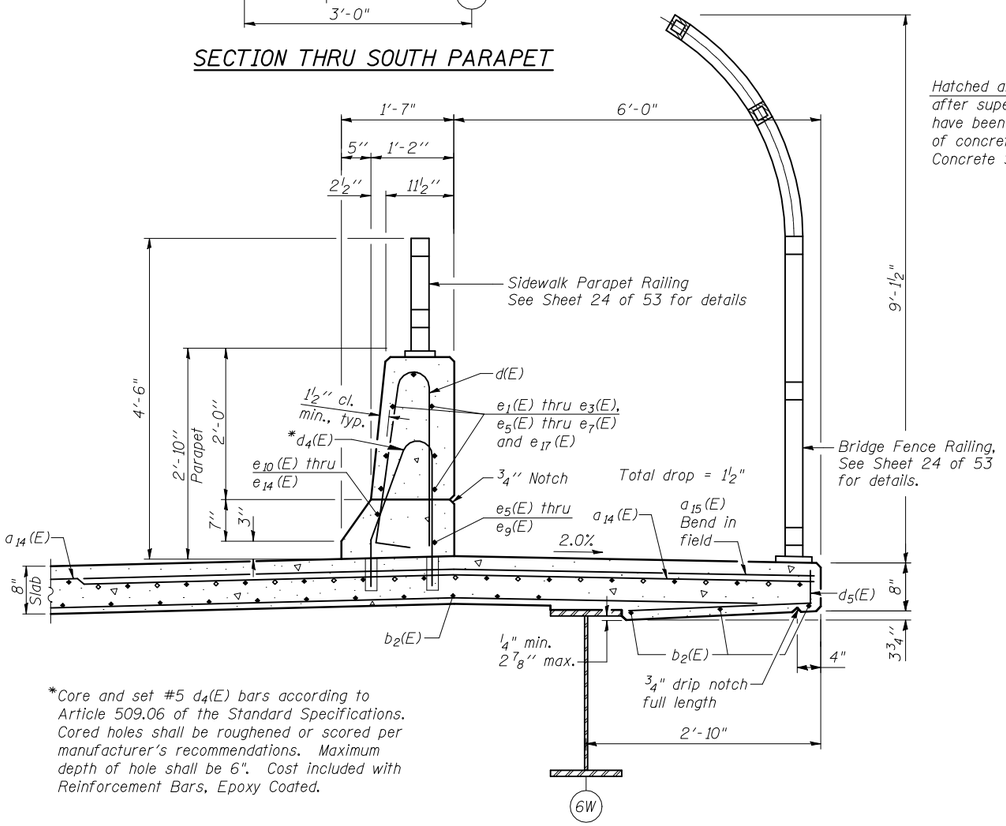


*Core and set #5 d4(E) bars according to Article 509.06 of the Standard Specifications. Cored holes shall be roughened or scored per manufacturer's recommendations. Maximum depth of hole shall be 6". Cost included with Reinforcement Bars, Epoxy Coated.

SECTION THRU NORTH PARAPET

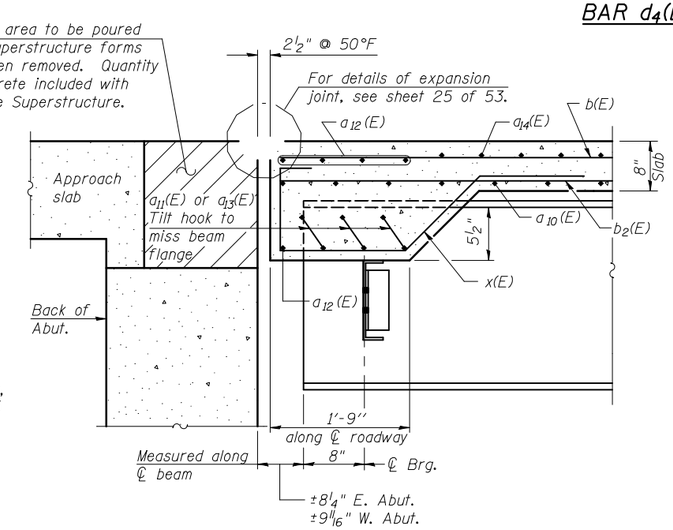


SECTION A-A

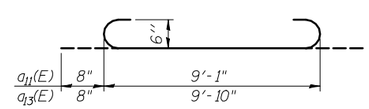


a11(E) & a13(E) BAR

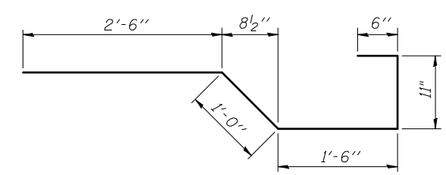


BAR x(E)

Coombe-Bloxdorf P.C.
-CIVIL ENGINEERS-
-STRUCTURAL ENGINEERS-
-LAND SURVEYORS-
Design Firm License No. 184-002703

| | | | |
|---|---|---|---|
| FILE NAME = $FILE$ | USER NAME = $USER$ | DESIGNED - GB | REVISED - |
| | | CHECKED - MCB | REVISED - |
| | PLOT SCALE = $SCALE$ | DRAWN - MML | REVISED - |
| CB PROJECT NO. 08024-2 | PLOT DATE = $DATE$ | CHECKED - MCB | REVISED - |

**STATE OF ILLINOIS**
**DEPARTMENT OF TRANSPORTATION**

**SUPERSTRUCTURE DETAILS**
**STRUCTURE NO. 039-0076 (WB)**
SHEET NO. 17 OF 53 SHEETS

| F.A.P. RTE. | SECTION | COUNTY | TOTAL SHEETS | SHEET NO. |
|---|---|---|---|---|
| 331 | (12-1)B-1 | JACKSON | 200 | 129 |
| | | CONTRACT NO. 78056 | | |
| | | ILLINOIS FED. AID PROJECT | | |