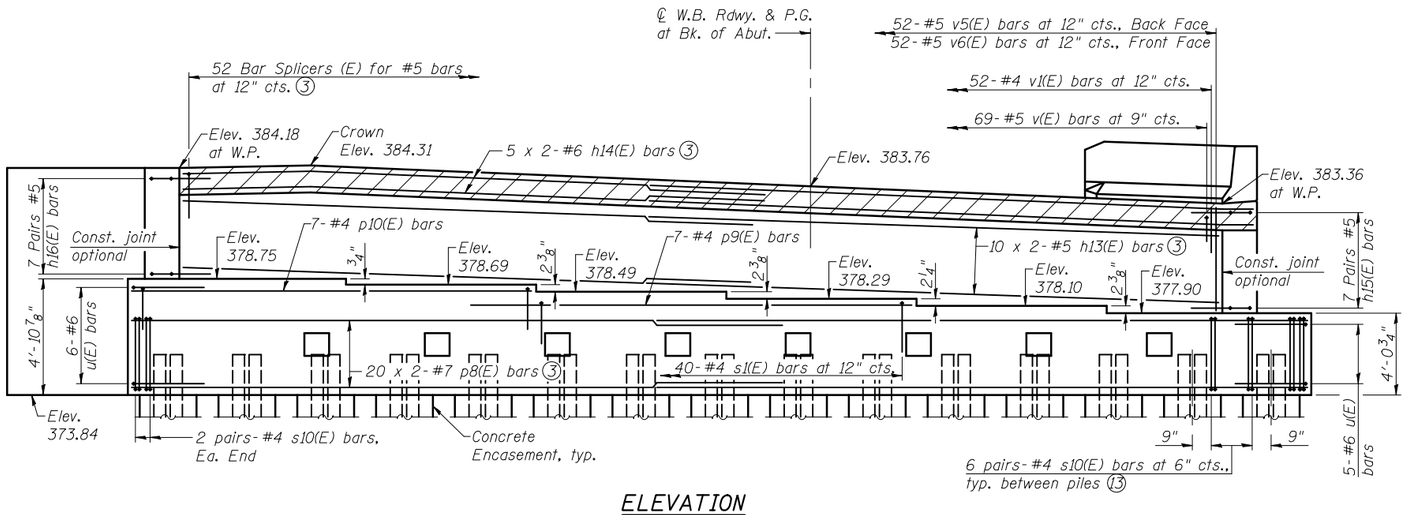

ELEVATION

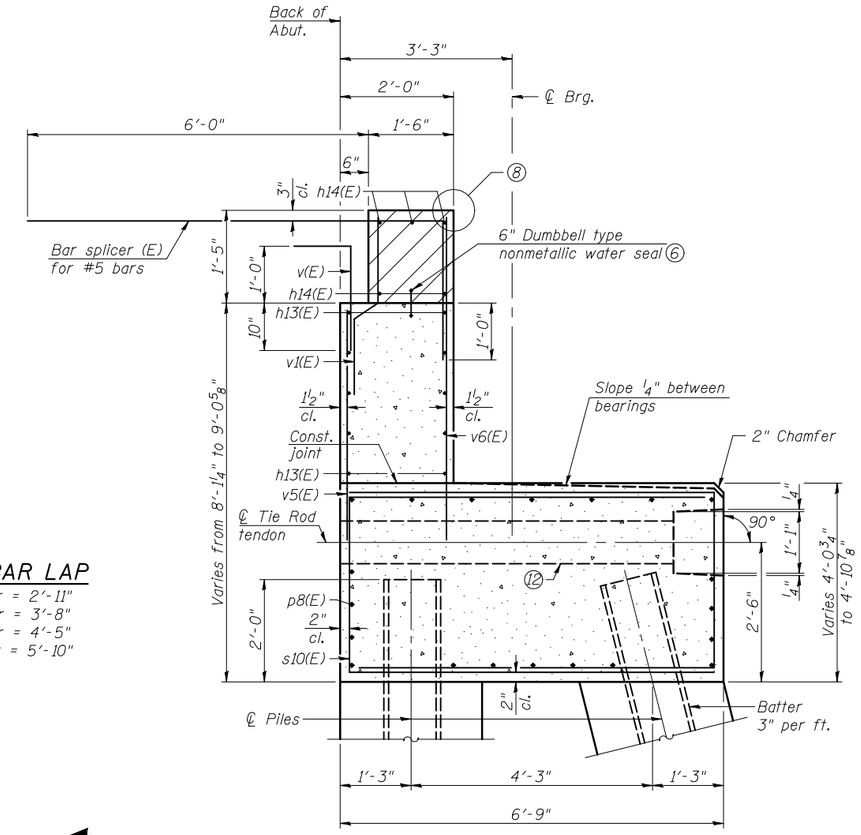

SEC. THRU ABUT.

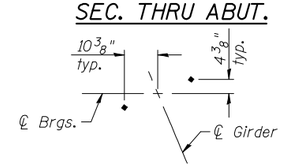

ANCHOR BOLT LAYOUT ④

MIN. BAR LAP

#4 bar = 2'-11"
#5 bar = 3'-8"
#6 bar = 4'-5"
#7 bar = 5'-10"

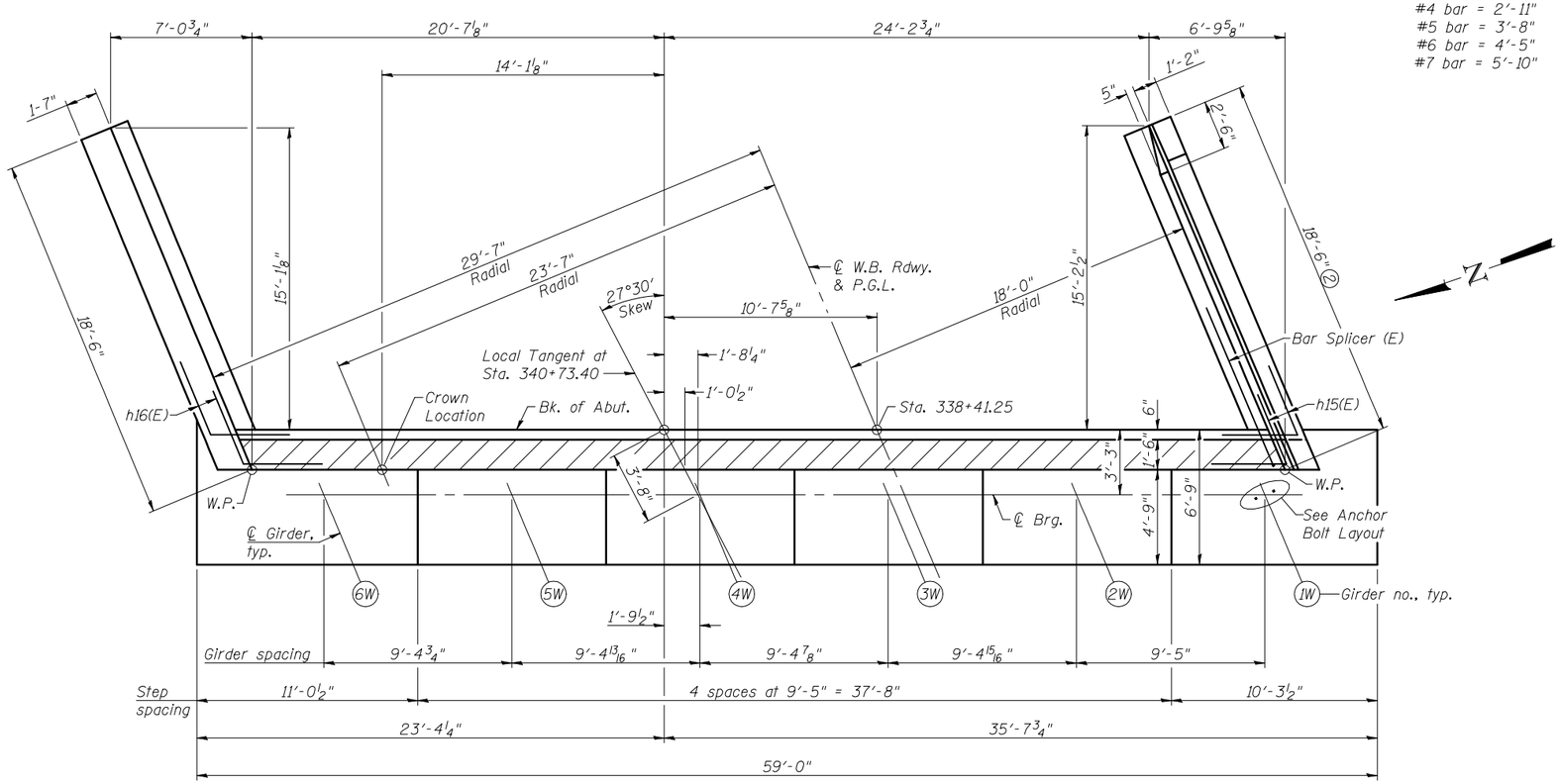

TOP VIEW

Notes:

1. For details of Bar Splicers, see sheet 48 of 53.
2. Wingwall length is along front face of end post.
3. For bar locations, see Sec. Thru Abut.
4. Space reinforcement in cap to miss anchor bolts.
5. Hatched area to be poured after superstructure falsework has been removed. Cost of concrete included with Concrete Superstructure on sheet 17 of 53.
6. 6" Dumbbell type nonmetallic water seal shall be in accordance with Sections 503.12 and 1054 of the Standard Specifications. Cost included with Concrete Structures.
7. Pour steps monolithically with cap.
8. For Expansion Joint details, see sheet 25 of 53.
9. Expansion joint details for skews less than 30°, as shown on sheet 25 of 53, are applicable for the East Abutment.
10. The abutments shall have all exposed surfaces of backwalls, bridge seats, and front faces of pile caps treated with Concrete Sealer.
11. Bars indicated thus 20 x 2-#7 etc. indicates 20 lines of bars with 2 lengths per line.
12. Round HSS blockout cast into cap for Tie Rod. For additional details, see sheet 35 of 53.
13. Adjust orientation of pairs of s10(E) bars as needed to miss piles and round HSS blockouts by varying bar lap.

MATTS ASSOCIATES Engineering + Architecture
ILLINOIS: Eastport Business Center 1, 100 Lenter Court, Suite 1, Collinsville, IL 62234, tel 618.345.2200, fax 618.345.7233
MISSOURI: Laclede Gas Building, 720 Olive, Suite 1680, St. Louis, MO 63101, tel 314.588.8081, fax 314.588.9605
www.cattaneassociates.com

USER NAME =	DESIGNED - JAD	REVISED -	
	CHECKED - DGL	REVISED -	
PLOT SCALE =	DRAWN - JAD	REVISED -	
PLOT DATE =	CHECKED - MAG	REVISED -	

STATE OF ILLINOIS
DEPARTMENT OF TRANSPORTATION

EAST ABUTMENT DETAILS
STRUCTURE NO. 039-0076 (W.B.)

SHEET NO. 34 OF 53 SHEETS

F.A.P. RTE.	SECTION	COUNTY	TOTAL SHEETS	SHEET NO.
331	(12-1)B-1	JACKSON	200	146
		CONTRACT NO. 78056		
		ILLINOIS FED. AID PROJECT		