ROUTE	SECTION	COUNTY	TOTAL SHEETS	SHEET NO.
T.R. 11	05-04122-00-BR	JASPER	14	6
CONTRACT NO. 95491		ILLINOIS	PROJECT BROS-079(133)	

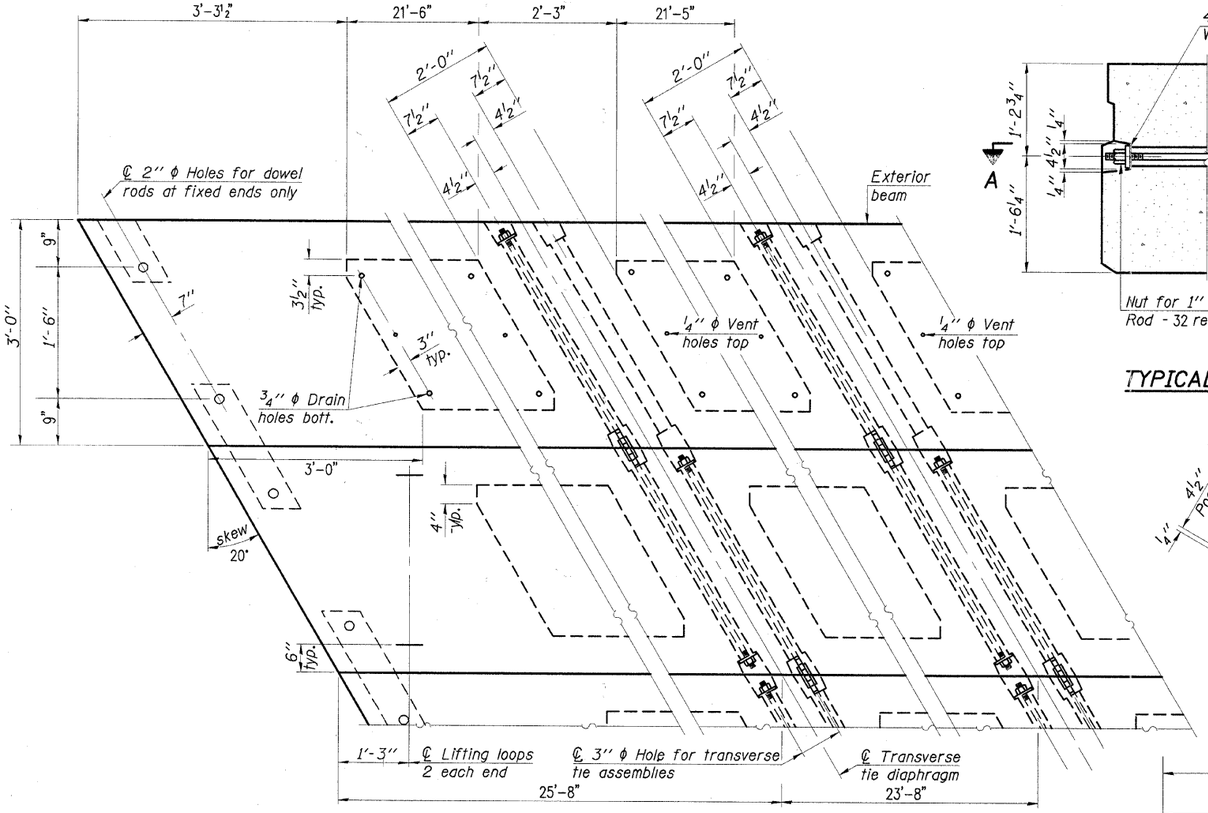

PLAN VIEW

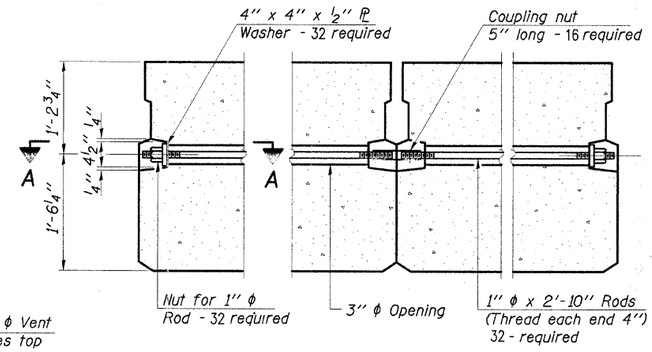

TYPICAL TRANSVERSE TIE ASSEMBLY

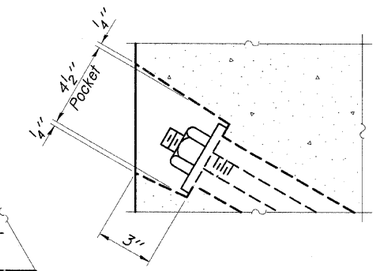

SECTION A-A

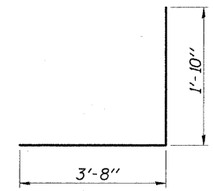

BAR S_4(E)

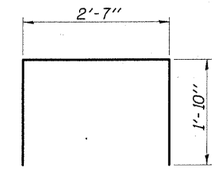

BAR S_1(E)

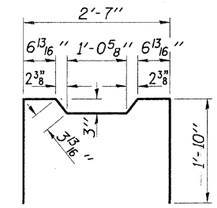

BAR S_2(E)

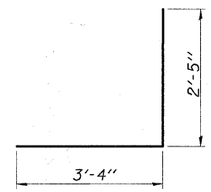

BAR S_3(E)

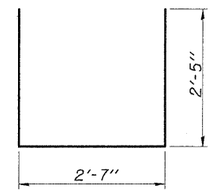

BAR S(E)

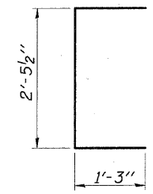

BAR U(E)

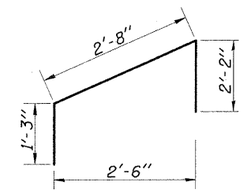

BAR U_1(E)

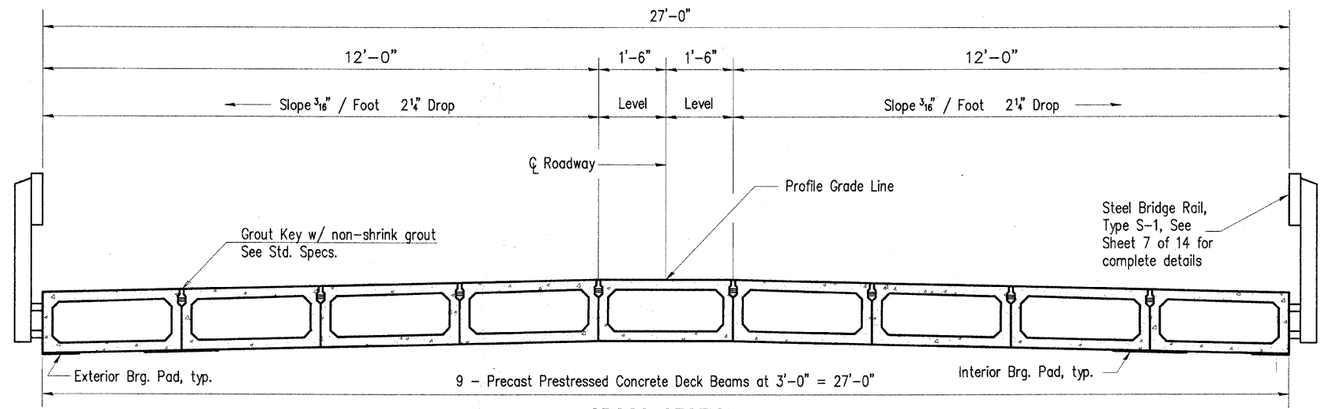

CROSS SECTION

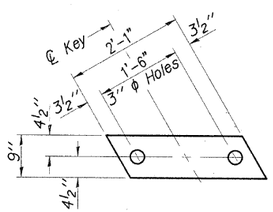

FABRIC BEARING PAD (Interior)

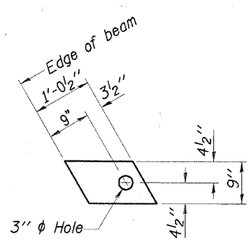

FABRIC BEARING PAD (Exterior)

FIXED

Note: Omit holes when using expansion bearings.

Note: Connect beams in pairs with the transverse tie configuration shown.

NOTES

Prestressing steel shall be uncoated high strength, low relaxation 7-wire strand, Grade 270. The nominal diameter shall be ½" and the nominal cross-sectional area shall be 0.153 sq. in.

The 1" ϕ rods in the transverse tie assembly shall be tightened to a snug fit and the threads set. Pockets on exterior faces of bridge shall be filled with grout after transverse tie assembly is in place.

Reinforcement bars shall conform to ASTM A 706, Grade 60. (See Special Provisions).

Two ⅛" fabric adjusting shims of the dimensions of the exterior bearing pad shall be provided for each bearing pad location.

A minimum 2½" ϕ lifting pin shall be used to engage the lifting loops during handling.

Corrosion Inhibitor, per Article 1020.05(b)(12) and 1021.06 of the Standard Specifications, shall be used in the concrete for precast prestressed concrete deck beams.

Compressive strength of prestressed concrete, f'c, shall be 6000 psi.

Compressive strength of prestressed concrete at release, f'ci, shall be 5000 psi.

BILL OF MATERIAL

Precast Prestressed Conc. Deck Bms. (33" depth)	Sq. Ft.	2025

33" X 36" PPC DECK BEAM DETAILS

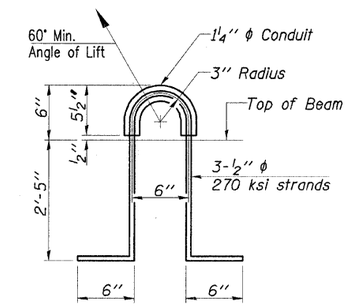

LIFTING LOOP DETAIL

CHARLESTON ENGINEERING, INC.
CONSULTING ENGINEERS
106 NORTH KITCHELL
P.O. BOX 397
OLNEY, ILLINOIS 62450
(618) 392-0736
ILLINOIS DEPARTMENT OF PROFESSIONAL REGULATION REGISTRATION #184.003513

SUPERSTRUCTURE DETAILS

STRUCTURE NO. 040-3254
T.R. 11
OVER ISLAND CREEK

SECTION 05-04122-00-BR
JASPER COUNTY
STATION 4+00.00