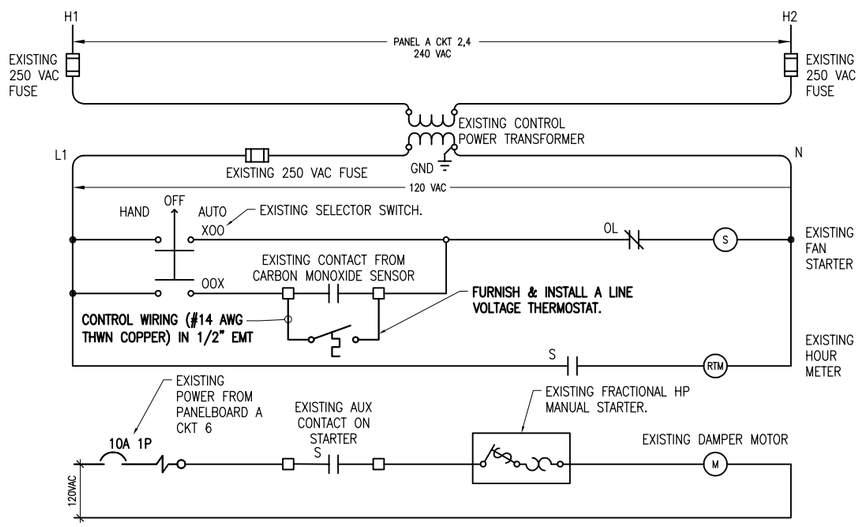

NOTES

1. EXHAUST FAN & MOTOR STARTER FOR THE SRE BUILDING ARE EXISTING.
2. FURNISH AND INSTALL A LINE VOLTAGE THERMOSTAT WITH ASSOCIATED CONTROL WIRING CONDUIT, JUNCTION BOXES & MOUNTING HARDWARE.
3. EXHAUST FAN STARTER SHALL BE ACTIVATED BY A CONTACT ON THE EXISTING CARBON MONOXIDE SENSOR OR THE PROPOSED THERMOSTAT WHEN OPERATING IN THE AUTOMATIC MODE.

EXHAUST FAN MOTOR STARTER CONTROL SCHEMATIC

VAULT MAIN DISTRIBUTION PANEL "B" SCHEDULE

CKT #	DUTY	SIZE	SIZE	DUTY	CKT #
1	VAULT RECEPTACLE	20A 1P	60A	AC SURGE PROTECTOR	2
3	WIND TEE	20A 1P	2P		4
5	RUNWAY 36	20A	60A	RUNWAY 18-36 CCR	6
7	PAPI	2P	2P		8
9	AIRPORT ROTATING	20A	60A	TAXIWAY CCR	10
11	BEACON	2P	2P		12
13	L-854 RADIO & CONTROL POWER	10A 1P	60A	SPARE	14
15	SPARE	30A 1P	2P		16
17	SPARE	20A	---	BLANK	18
19		2P	---	BLANK	20
21	SPARE	20A 1P	---	BLANK	22
23	SPARE	20A 1P	---	BLANK	24
25	SPARE	15A 1P	---	BLANK	26
27	BLANK	---	---	BLANK	28
29	BLANK	---	---	BLANK	30
31	BLANK	---	---	BLANK	32
33	BLANK	---	---	BLANK	34
35	BLANK	---	---	BLANK	36
37	BLANK	---	---	BLANK	38
39	BLANK	---	---	BLANK	40
41	BLANK	---	---	BLANK	42

S/N GND

225 AMP, 120/240 VAC, 1 PHASE, 3 WIRE, 42 CIRCUIT PANELBOARD WITH 150 AMP, 2 POLE MAIN BREAKER, RATED 10,000 AIC AT 240 VAC IN A NEMA 1 ENCLOSURE, UL LISTED SUITABLE FOR SERVICE ENTRANCE. INCLUDE COPPER GROUND BAR KITS. ALL FEEDER AND BRANCH BREAKERS SHALL BE BOLT-ON TYPE WITH 10,000 AIC RATING AT 120/240 VAC. PANELBOARD SHALL BE SQUARE D NQ SERIES OR APPROVED EQUAL.

NOTES

1. PANELBOARD BUSSES SHALL BE COPPER. NEUTRAL SHALL BE COPPER. EQUIPMENT GROUND BAR SHALL BE COPPER.
2. ALL BRANCH CIRCUIT & FEEDER BREAKERS SHALL BE BOLT-ON TYPE WITH 10,000 AIC AT 120/240 VAC.
3. INCLUDE ENGRAVED, PHENOLIC OR PLASTIC LEGEND PLATE LABELED "VAULT MAIN DIST. PANEL B, 120/240 VAC, 1PH, 3W". INCLUDE ADDITIONAL LEGEND PLATE FOR THE EXTERIOR VAULT MAIN BREAKER LABELED "VAULT MAIN DISCONNECT".
4. PANELBOARD SHALL BE MANUFACTURED IN THE UNITED STATES TO COMPLY WITH THE AIRPORT IMPROVEMENT PROGRAM BUY AMERICAN PREFERENCE REQUIREMENTS. PROVIDE CERTIFICATION OF MANUFACTURE IN THE UNITED STATES WITH SHOP DRAWING SUBMITTAL.
5. CIRCUIT BREAKERS AND WIRING SHALL BE SIZED FOR THE ACTUAL EQUIPMENT FURNISHED IN CONFORMANCE WITH THE RESPECTIVE MANUFACTURER'S RECOMMENDATION AND N.E.C. CONTRACTOR SHALL ADJUST CIRCUIT BREAKER SIZES & WIRING WHERE APPLICABLE TO CONFORM WITH THE MANUFACTURER'S RECOMMENDATIONS AND N.E.C.

REVISION
DATE

SHELBY COUNTY AIRPORT
SHELBYVILLE, ILLINOIS

IL PROJ.: 2H0-4149 A.I.P. PROJ.: 3-17-0093-B11

Hanson Proj. No. 10A0047
Filename E-611.DWG
Scale AS SHOWN
Date 02/18/12

LAYOUT	KNL	02/20/12
DRAWN	CWS	02/20/12
REVIEWED	CAH/KNL	02/23/12

© Copyright Hanson Professional Services Inc. 2012
HANSON
Hanson Professional Services Inc.
1525 South Sixth Street
Springfield, Illinois 62703-2886
Ph: (217) 788-2450 Fax: (217) 788-2503
www.hanson-inc.com
Offices Nationwide

CONSTRUCT VAULT, LIGHT TAXIWAY & INSTALL NAVAIDS

PANELBOARD SCHEDULE AND DETAILS

MAR 09, 2012 2:04 PM KINCA00394
I:\10JOBS\10A0047\10A0047D\CAD\AIRPORT\SHEET\E-611.DWG