ROUTE NO.	SECTION	COUNTY	TOTAL SHEETS	SHEET NO.
F.A.U. 8239	RS,R	MONTGOMERY	302	161
FED. ROAD DIST. NO. 7		ILLINOIS	FED. AID PROJECT-	

SHEET NO. 2
2 SHEETS

CONTRACT NO. 72526

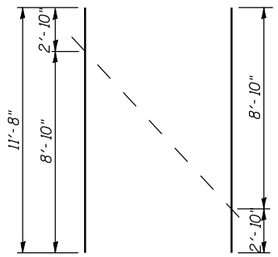

v_1 Bars

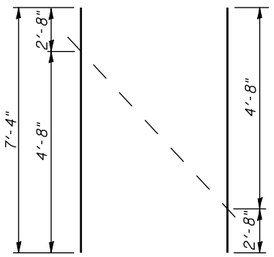

t Bars

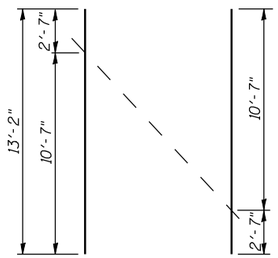

h_2 Bars

FIELD CUTTING DIAGRAMS

Order h_2, t & v_1 bars full length, cut to fit according to Field Cutting Diagrams shown.

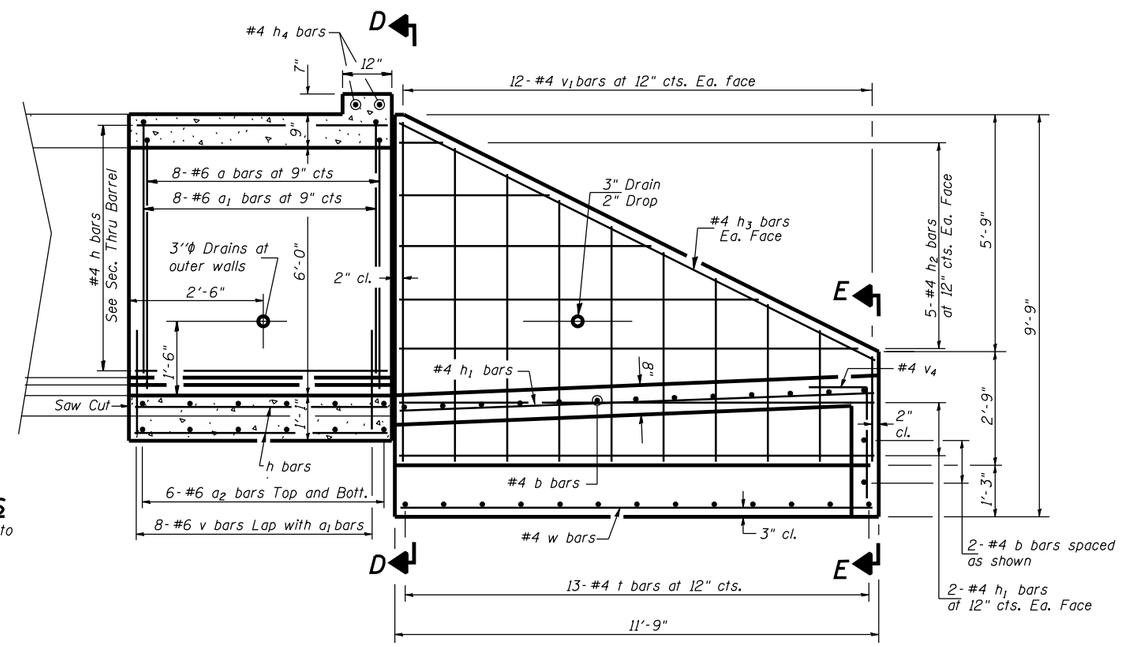

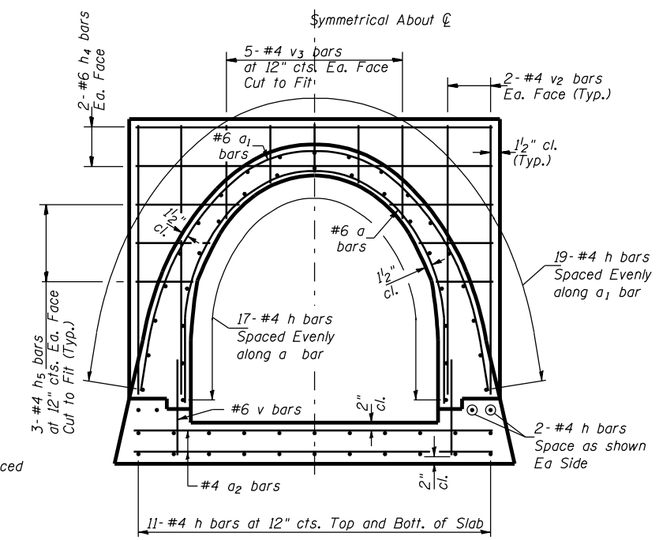

PROPOSED SECTION THRU BARREL

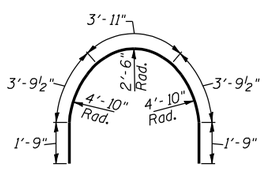

a Bars

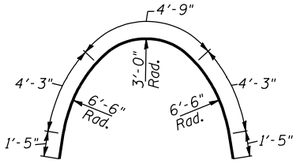

a_1 Bars

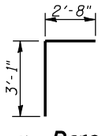

v_4 Bars

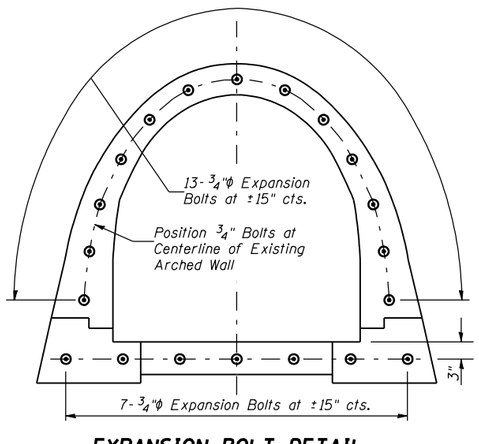

EXPANSION BOLT DETAIL

Expansion bolts shall be ¾" diameter hooked bolts. Hooked bolts shall extend a minimum of 9" into new concrete.

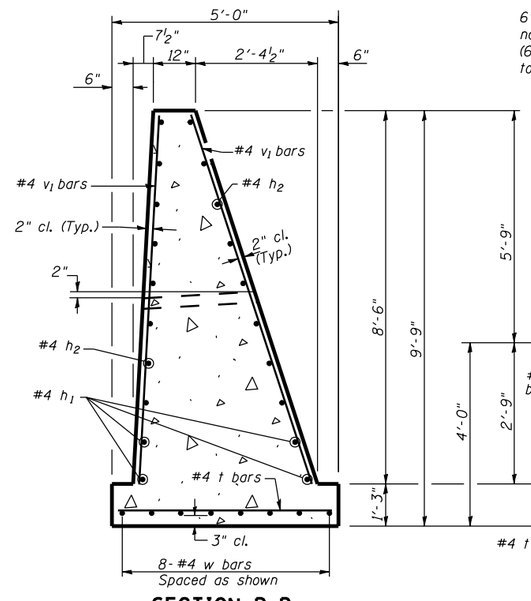

SECTION D-D

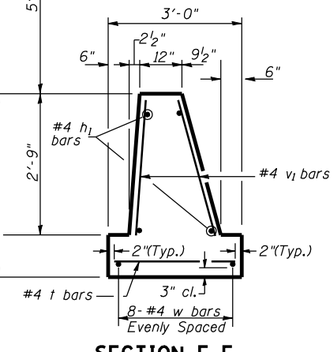

SECTION E-E

SPECIAL WINGWALL

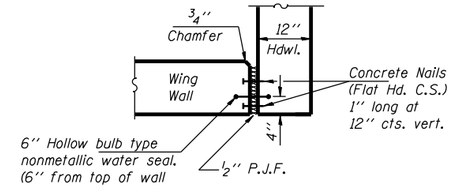

DETAIL A

Cost of P.J.F., Hollow Bulb type water seal and concrete nails included with "Concrete Box Culverts".

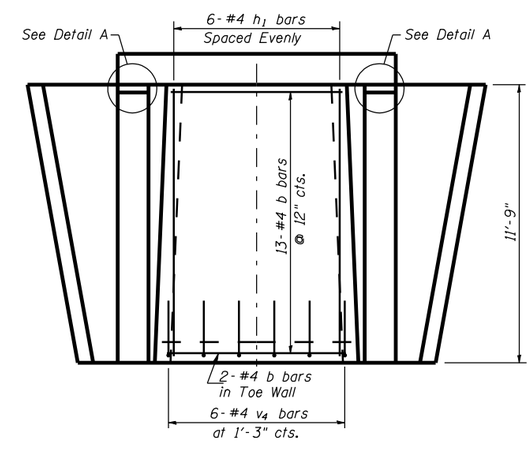

APRON REINFORCEMENT PLAN

DESIGNED	BAN
CHECKED	JOH
DRAWN	TC
CHECKED	BAN

CULVERT DETAILS
F.A.U. ROUTE 8239
(OLD U.S. ROUTE 66)
SECTION RS,R
MONTGOMERY COUNTY
STATION 765+98.45

HUTCHISON ENGINEERING, INC.
JACKSONVILLE, ILLINOIS
Date: 2/8/2006

2280-1/2280-1D09