ROUTE NO.	SECTION	COUNTY	TOTAL SHEETS	SHEET NO.
F.A.U. 8239	RS,R	MONTGOMERY	302	162
FED. ROAD DIST. NO. 7		ILLINOIS	FED. AID PROJECT-	

SHEET NO. 1
1 SHEETS

CONTRACT NO. 72526

GENERAL NOTES

Reinforcement Bars shall conform to the requirements of AASHTO M31 or M322, Grade 60.

Exposed edges shall have a $\frac{3}{4}$" chamfer unless otherwise noted.

For backfilling and embankment see Standard Specifications.

Plan dimensions and details relative to existing structure have been taken from existing plans and are subject to nominal construction variations. It shall be the Contractor's responsibility to verify such dimensions and details in the field and make necessary approved adjustments prior to construction or ordering of materials. Such variations shall not be cause for additional compensation for a change in the scope of the work, however, the Contractor will be paid for the quantity actually furnished at the unit price bid for the work.

Refer to Soil Boring Log for Sta. 778+48, 15.' Rt in the Special Provisions.

TOTAL BILL OF MATERIAL

Bar	No.	Size	Length	Shape
h_{20}	18	#4	11'-2"	——
h_{21}	8	#4	12'-0"	——
h_{22}	18	#4	18'-8"	——
h_{23}	10	#4	16'-7"	——
h_{24}	2	#4	12'-4"	——
h_{25}	2	#4	19'-4"	——
t_{20}	6	#4	13'-5"	——
t_{21}	10	#4	13'-5"	——
v_{20}	12	#4	22'-11"	——
v_{21}	20	#4	22'-11"	——
w_{20}	9	#4	11'-2"	——
w_{21}	9	#4	18'-8"	——

ITEM	UNIT	TOTAL
Wingwall Removal *	EACH	2
Concrete Box Culverts	CU YD	55.1
Reinforcement Bars	POUND	1390
Temporary Sheet Piling	SQ FT	1318

* Approximately 55.1 Cu Yd of concrete to be removed

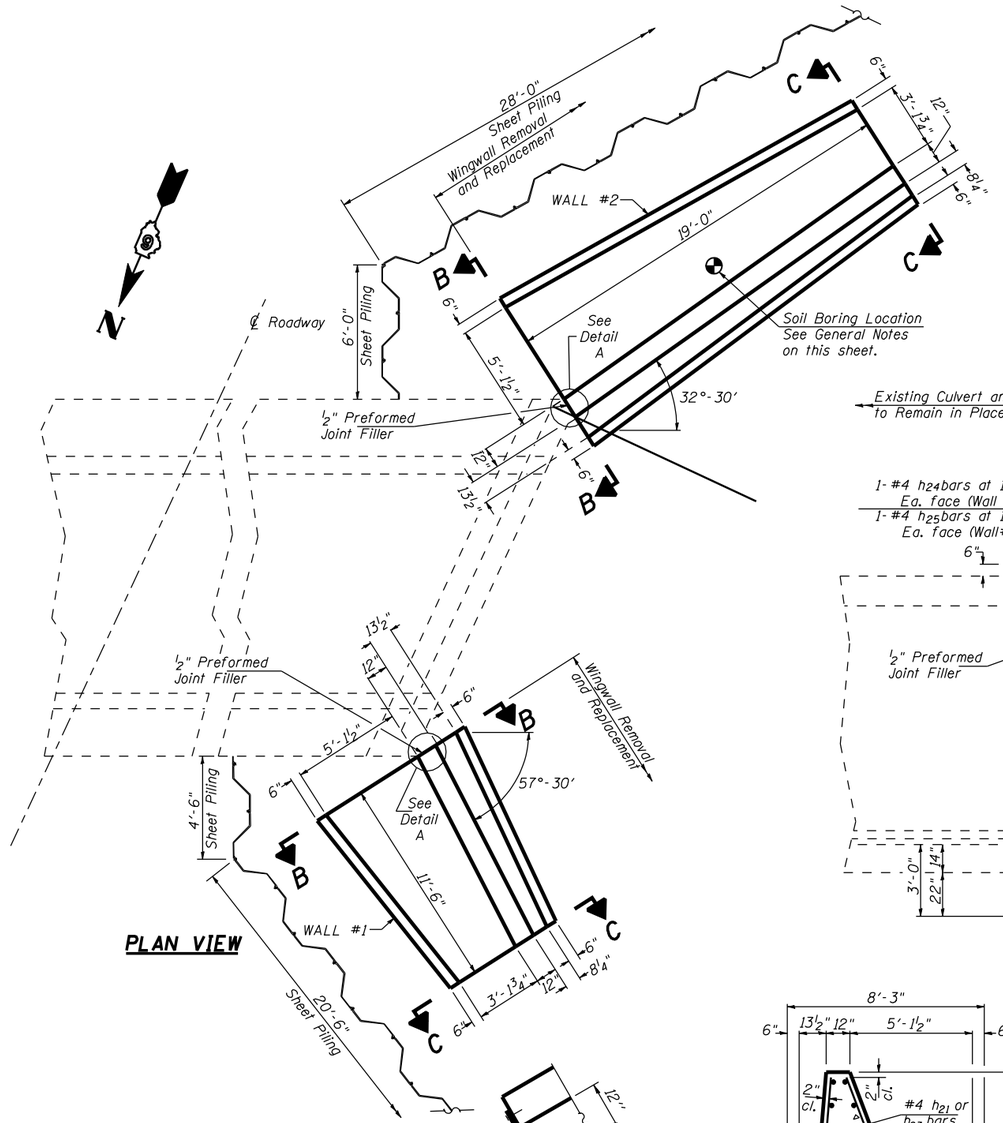

PLAN VIEW

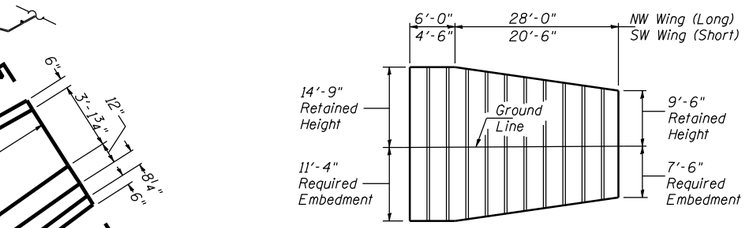

TEMPORARY SHEET PILING

The Contractor is responsible for retaining the soil on the culvert.

Minimum Section Modulus of Temporary Sheet Piling shall be 20 in^3/ft.

If the Contractor chooses to alter the temporary cantilevered sheet piling design requirements shown on the plans, a design submittal including plan details and calculations will be required for review and acceptance by the Engineer.

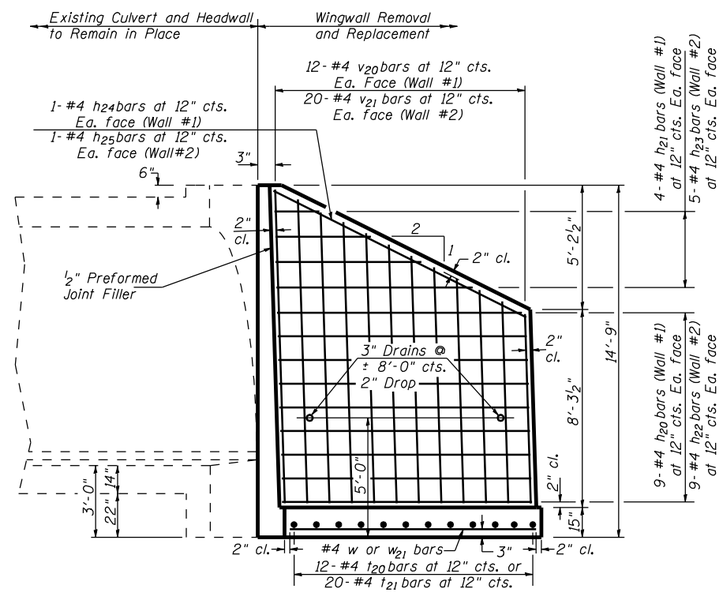

ELEVATION VIEW

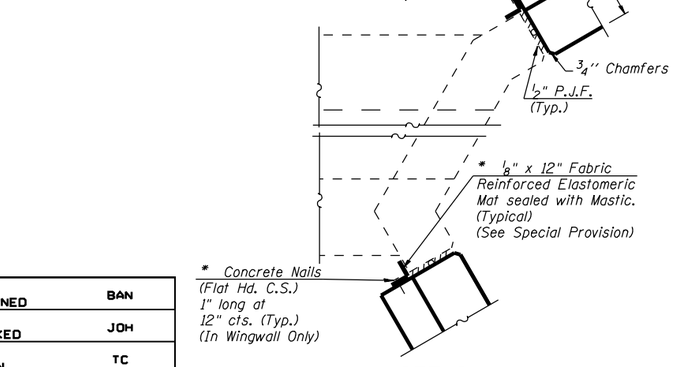

DETAIL A

* Cost included with Concrete Box Culverts.

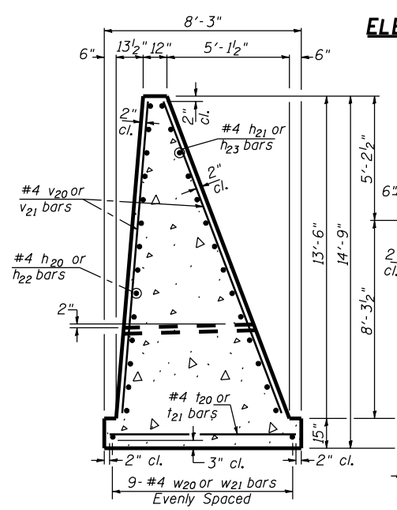

SECTION B-B

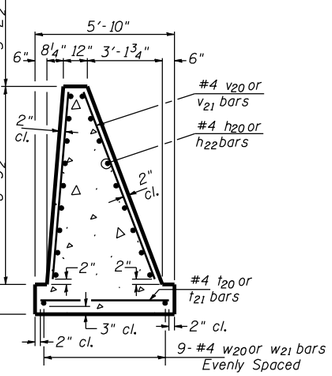

SECTION C-C

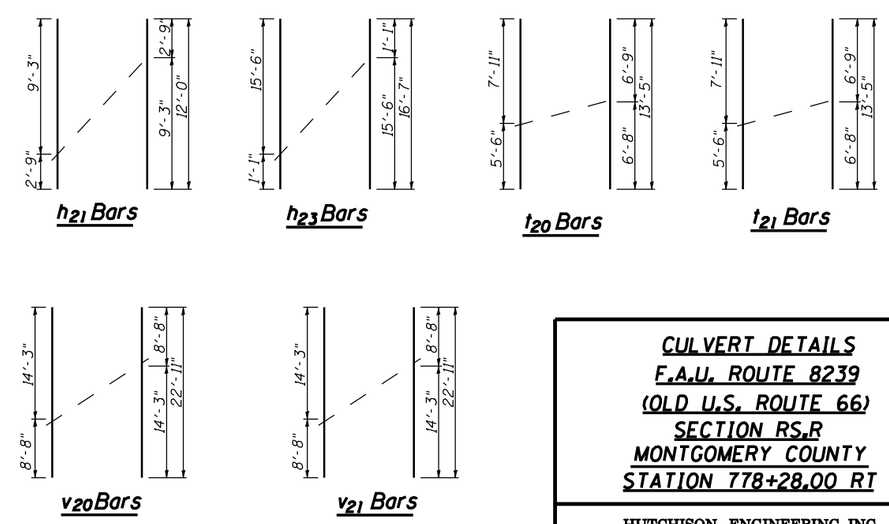

DESIGNED	BAN
CHECKED	JOH
DRAWN	TC
CHECKED	JOH

2280-1/2280-1D03

CULVERT DETAILS
F.A.U. ROUTE 8239
(OLD U.S. ROUTE 66)
SECTION RS,R
MONTGOMERY COUNTY
STATION 778+28.00 RT

HUTCHISON ENGINEERING, INC.
JACKSONVILLE, ILLINOIS