F.A.P. RTE.	SECTION	COUNTY	TOTAL SHEETS	SHEET NO.
315	34-4	HANCOCK	452	241
FED. ROAD DIST. NO.	ILLINOIS	FED. AID PROJECT		

D-96-551-02

CONTRACT NO. 72680

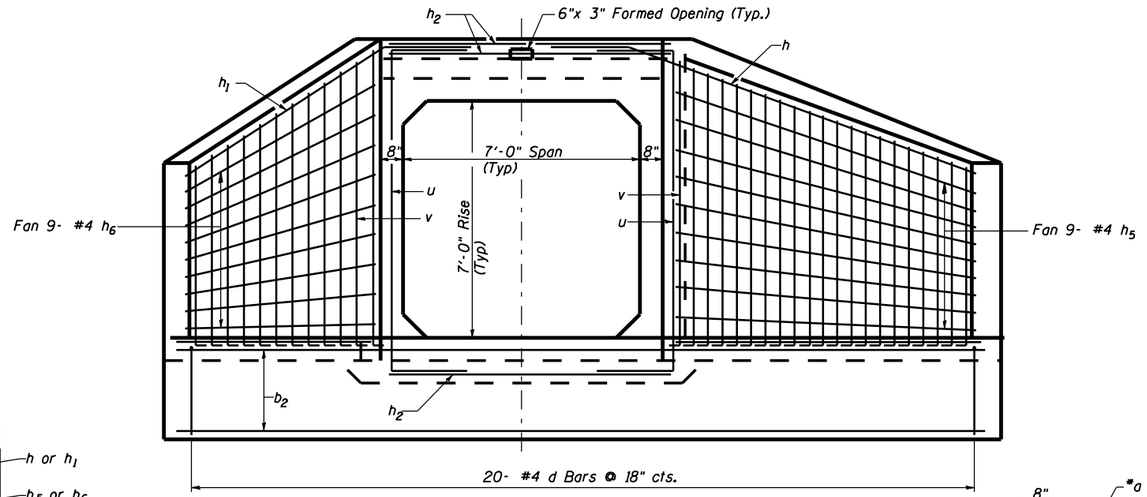

END ELEVATION

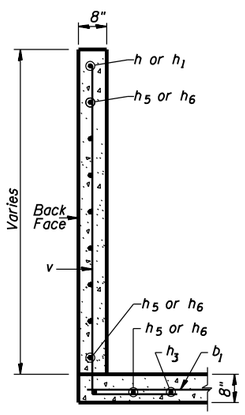

SECTION A-A

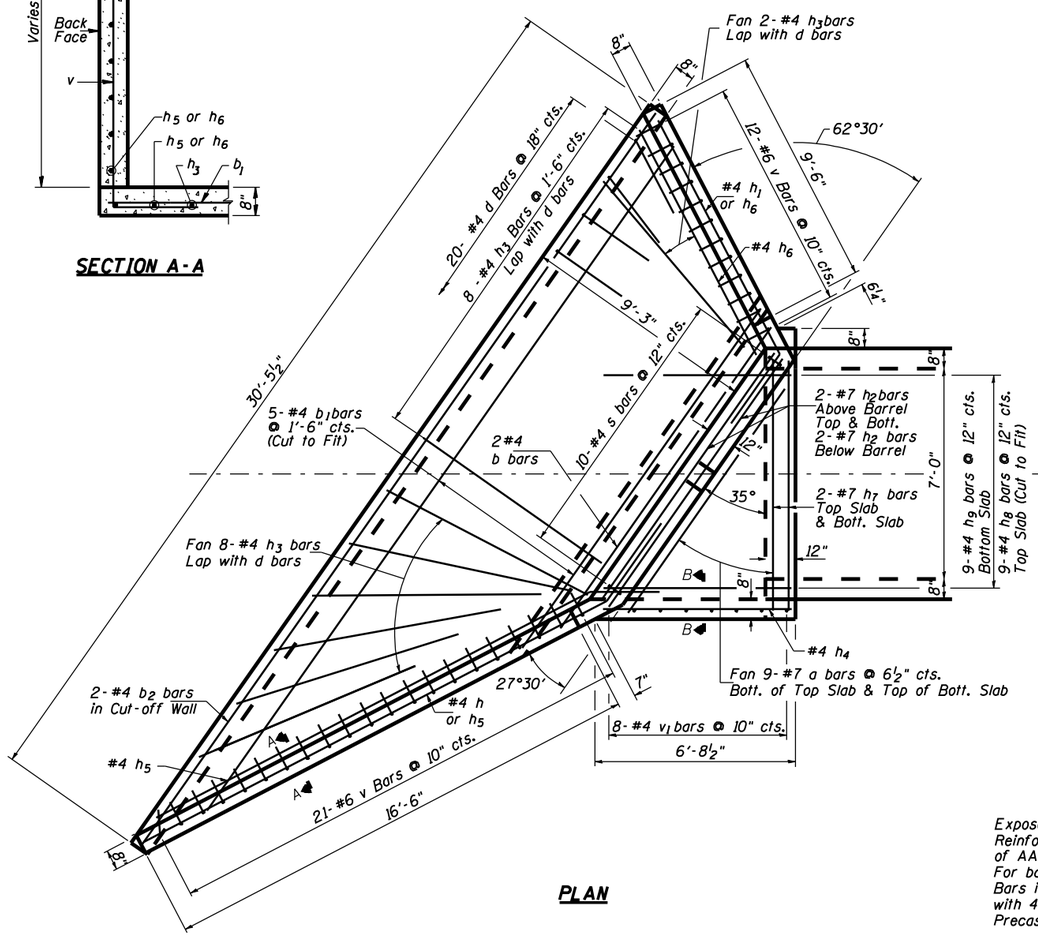

PLAN

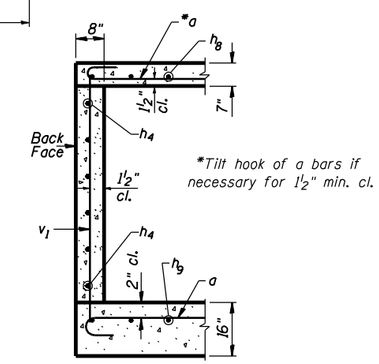

*Tilt hook of a bars if necessary for 1½" min. cl.

SECTION B-B

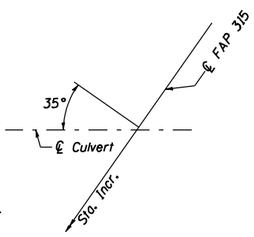

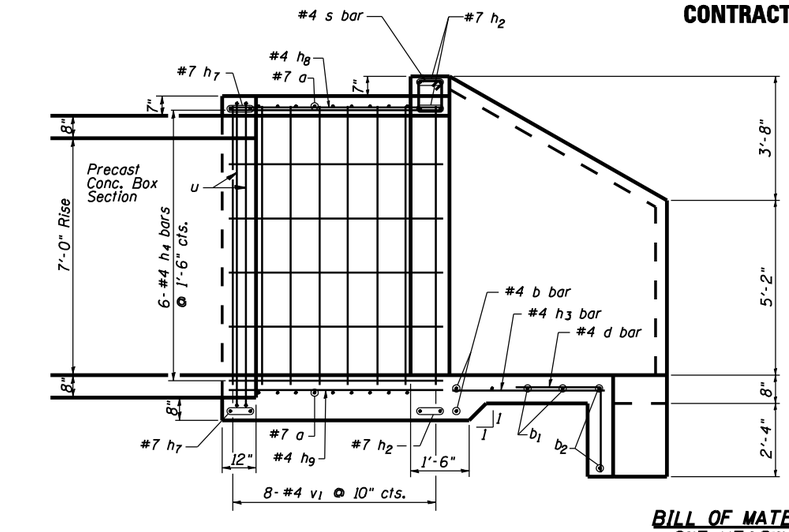

HALF SIDE ELEVATION

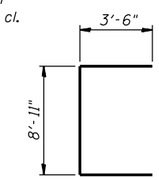

BAR u

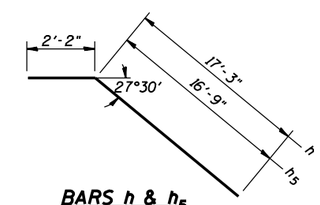

BARS h & h_5

Bend to Fit

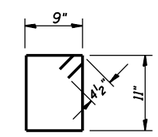

BAR s

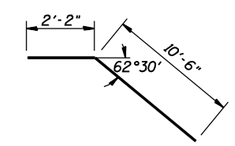

BARS h_1

Bend to Fit

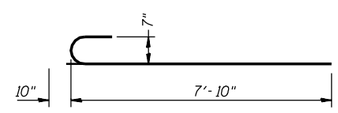

BAR a

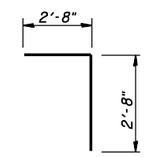

BAR d

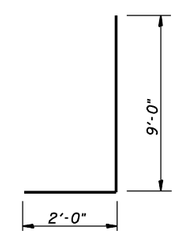

BARS v

BILL OF MATERIAL ONE HEADWALL

BAR	NO.	SIZE	LENGTH	SHAPE
a	18	#7	8'-8"	
b	2	#4	12'-3"	
b_1	5	#4	27'-3"	
b_2	2	#4	30'-0'	
d	20	#4	5'-4"	
h	1	#4	19'-5"	
h_1	1	#4	12'-8"	
h_2	6	#7	9'-10"	
h_3	18	#4	9'-0"	
h_4	6	#4	6'-5"	
h_5	10	#4	18'-11"	
h_6	10	#4	10'-2"	
h_7	4	#7	9'-4"	
h_8	9	#4	6'-5"	
h_9	9	#4	8'-0"	
s	10	#4	4'-1"	
u	4	#5	15'-11"	
v	33	#6	11'-0"	
v_1	8	#4	9'-0"	

Item	Unit	Quantity
Concrete Box Culverts	Cu. Yd.	14.1
Reinforcement Bars	Lbs.	1860
Box Culvert End Sections	Each	2

NOTES

Exposed edges shall be beveled ¾".
Reinforcement Bars shall conform to the requirements of AASHTO M-31 or M322, Grade 60.
For backfilling and embankment, See Standard Specifications.
Bars indicated thus 12x4-#5 etc. indicates 12 lines of bars with 4 lengths per line.
Precast substitution not allowed.

DESIGN STRESSES

fy = 60,000 psi
f'c = 3,500 psi

CAST-IN-PLACE END SECTION DETAILS FOR 7'X7' BOX CULVERT FAP RTE 315 STATION 949+35.60

HUTCHISON ENGINEERING, INC.
JACKSONVILLE, ILLINOIS
Date: January 31, 2006

Bridge/2173-Hancock/culv 949+36/94936c001