CONTRACT NO. 76952

F.A.P. RTE.	SECTION	COUNTY	TOTAL SHEETS	SHEET NO.
312	66-3I	MONROE	45	6
STA. _____		TO STA._____		
FED. ROAD DIST. NO. _	ILLINOIS	FED. AID PROJECT		

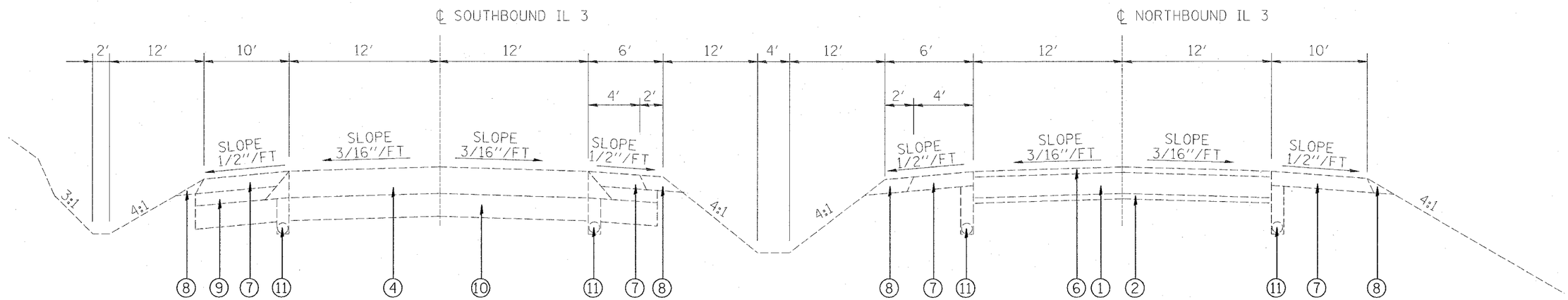

TANGENT SECTION

STA. 627+00 TO STA. 632+35

LEGEND

1. EXISTING 10″ P.C.C. PAVEMENT
2. EXISTING 4″ SUB-BASE
4. EXISTING BITUMINOUS CONCRETE PAVEMENT (FULL DEPTH), TYPE 2, 14″
6. EXISTING BITUMINOUS CONCRETE RESURFACING
7. EXISTING BITUMINOUS SHOULDERS, 8″
8. EXISTING AGGREGATE SHOULDERS, TYPE B
9. EXISTING SUB-BASE GRANULAR MATERIAL, TYPE C
10. EXISTING LIME MODIFIED SOILS, 12″
11. EXISTING PIPE UNDERDRAINS, 4″

REVISIONS	
NAME	DATE

ILLINOIS DEPARTMENT OF TRANSPORTATION

EXISTING TYPICAL SECTIONS

FAP ROUTE 312 (IL 3)
SECTION 66-3I
MONROE COUNTY

SCALE: VERT. HORIZ.

DATE

DRAWN BY

CHECKED BY

PLOT DATE = $DATE$
FILE NAME = $FILEL$
PLOT SCALE = $SCALE$
REFERENCE = REF