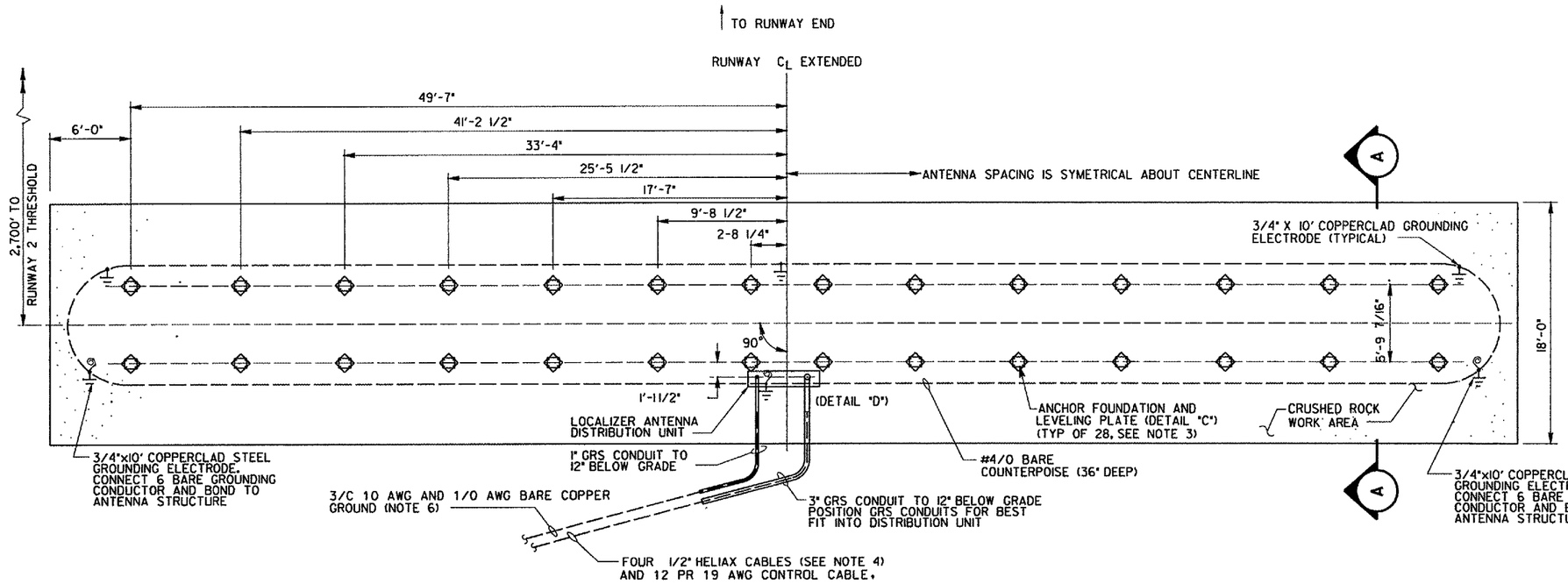

LOCALIZER ANCHOR FOUNDATION LAYOUT

PLAN

5 0 5 10 15

SCALE IN FEET

3" GRS CONDUIT TO 12" BELOW GRADE POSITION GRS CONDUITS FOR BEST FIT INTO DISTRIBUTION UNIT

NOTES:

1. SCREW ANCHOR FOUNDATIONS SHALL BE LOCATED WITHIN ~2" OF DIMENSIONS SHOWN. LEVELING PLATE SHALL BE WELDED TO EACH FOUNDATION TOP AFTER PLATE CENTER IS LOCATED WITHIN ~1/8" OF DIMENSIONS SHOWN.
2. ALL SCREW ANCHOR FOUNDATION TOPS SHALL BE INSTALLED TO THE SAME ELEVATION WITHIN 1/8" MAXIMUM TOTAL VARIATION.
3. LONGITUDINAL CENTERLINE OF ANTENNA ARRAY SHALL BE PERPENDICULAR TO RUNWAY CENTER-LINE WITHIN ~ 0.05 DEGREES. CENTER OF ANTENNA ARRAY SHALL BE ON RUNWAY CENTERLINE EXTENDED WITHIN ~3".
4. 15' COILS OF ALL SIGNAL AND CONTROL CABLES SHALL BE LEFT AT THE DISTRIBUTION UNIT FOR TERMINATION BY FAA INSTALLATION PERSONNEL.
5. ALL BURIED CABLE CONNECTIONS SHALL BE MADE USING EXOTHERMIC WELDS PER SPECIFICATION FAA-GL-918C.
6. TERMINATE POWER CONDUCTORS INSIDE DISTRIBUTION UNIT FOR OBSTRUCTION LIGHTING AND CONVENIENCE OUTLET.

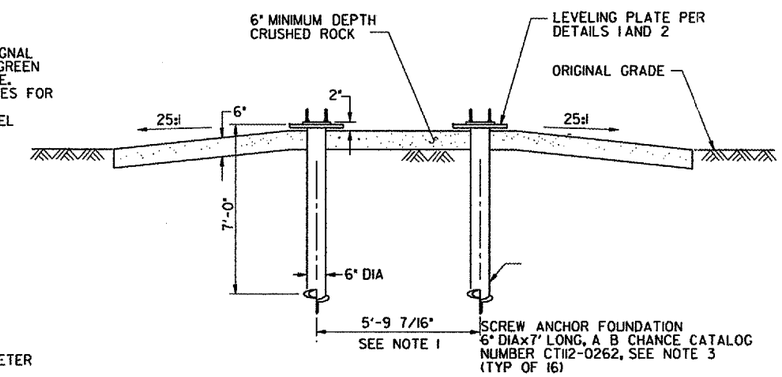

A SECTION
SCALE: NONE

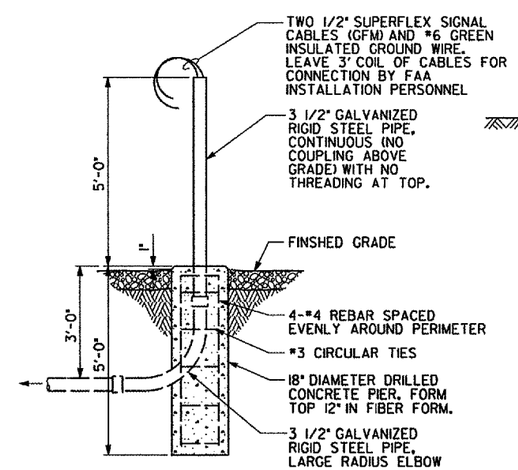

DME FOUNDATION

3 DETAIL
NOT TO SCALE

NOTE:
1. FAA INSTALLATION PERSONNEL WILL INSTALL DME ANTENNA AND MAKE CABLE CONNECTIONS.

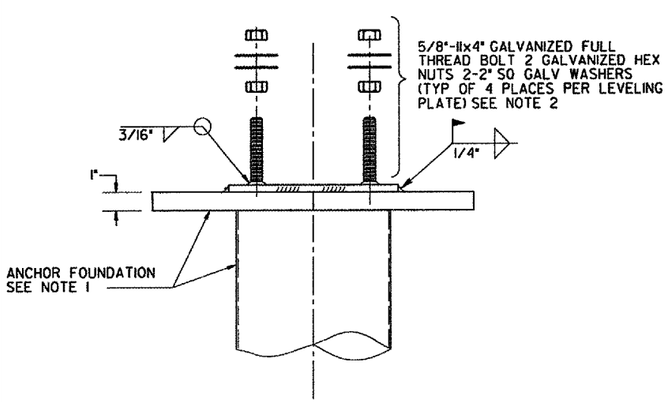

1 DETAIL - LEVELING BOLT
SCALE: NONE

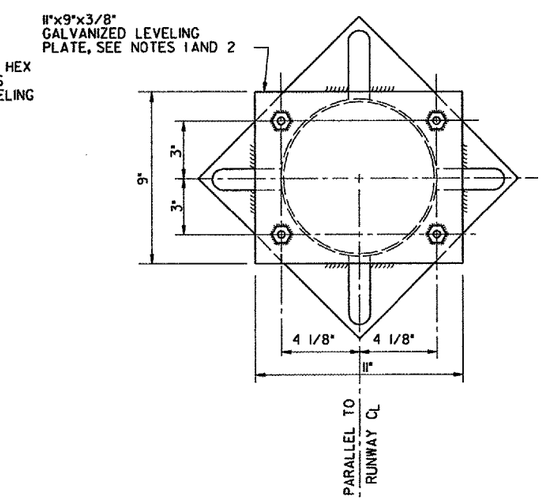

2 DETAIL
SCALE: NONE
(TYP OF 16)

CONTRACTOR SHALL SUBMIT REQUESTS FOR SUBSTITUTION OF SPECIFIC MANUFACTURER'S ITEMS SHOWN PER PARAGRAPH 1 OF THE SPECIAL SPECIFICATIONS.

REV	DATE	DESCRIPTION	JCN	REDLINE DATE	APVD

SHEET 54 OF 66

DEPARTMENT OF TRANSPORTATION
FEDERAL AVIATION ADMINISTRATION
GREAT LAKES REGION — CHICAGO, ILLINOIS

LOCALIZER
MK-20A ANTENNA ARRAY FOUNDATION DETAILS
RUNWAY 33

AURORA — AURORA MUNICIPAL AIRPORT — IL

REVIEWED BY	SUBMITTED BY	APPROVED BY
	PROJ ENGR, *TIMOTHY DYER*	PLATFORM MGR, *CLELAND MICHEEL*
DESIGNED TAD	ISSUED BY CHICAGO NAS IMPLEMENTATION CENTER	DATE 02/27/2006 JCN
DRAWN TAD		DRAWING NO ARR-D-LOC33-C03 REV
CHECKED TAD		SHEET

k:\aurorap\0428504\dgn\sheets\loc 33 drawings 3-6-05\ARR-D-LOC33-C03.dgn
3/16/2006 3:48:48 PM BIANES
BRFSF