STATE OF ILLINOIS
DEPARTMENT OF TRANSPORTATION

ROUTE NO.	SECTION	COUNTY	TOTAL SHEETS	SHEET NO.
		LAKE	11	7
FED. ROAD DIST. NO. 7		ILLINOIS	FED. AID PROJECT-	

SHEET NO. 3
6 SHEETS

Contract No. 62874.

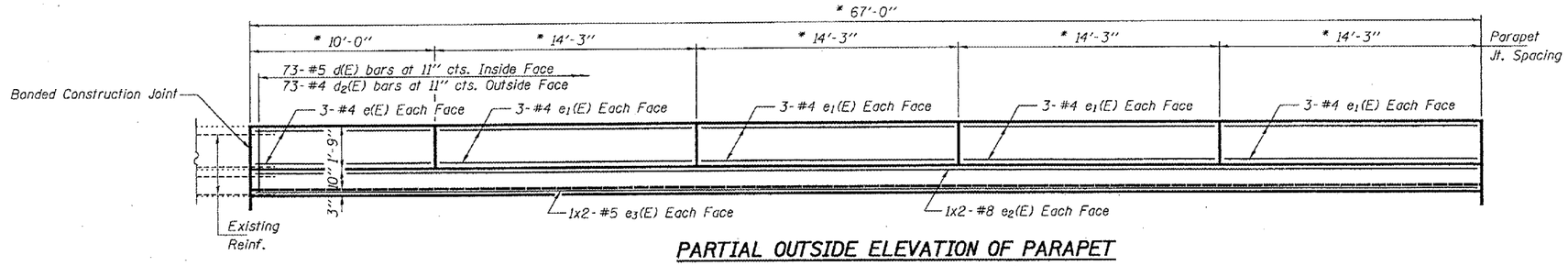

PARTIAL OUTSIDE ELEVATION OF PARAPET

* Along inside face of parapet.

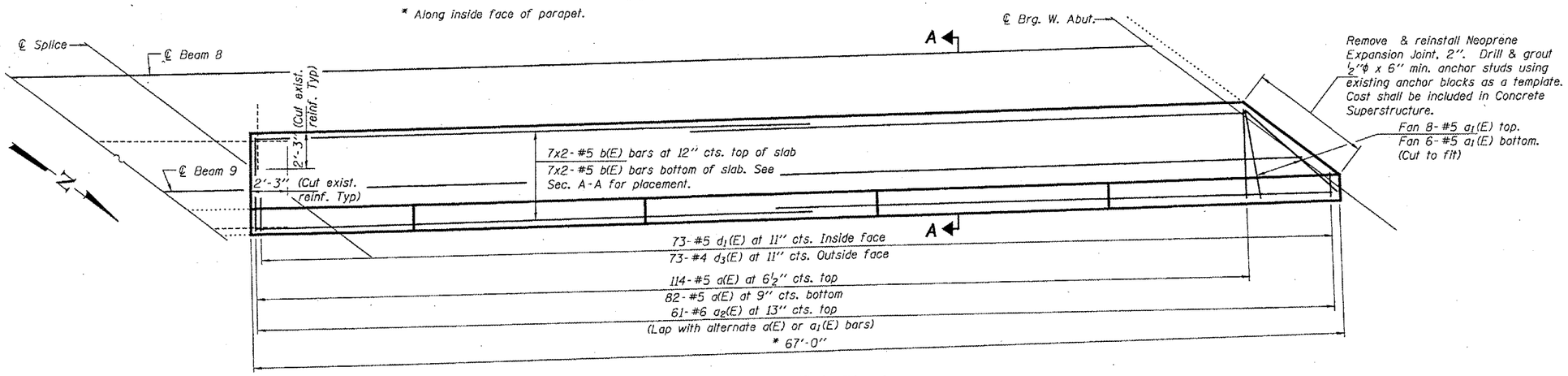

PARTIAL PLAN

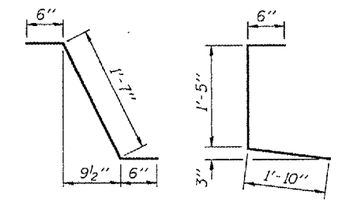

BAR $d_1(E)$ **BAR $d_3(E)$**

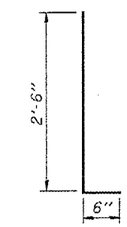

BARS d(E) & $d_2(E)$

MIN. BAR LAPS
#5 bar = 2'-2"
#8 bar = 4'-6"

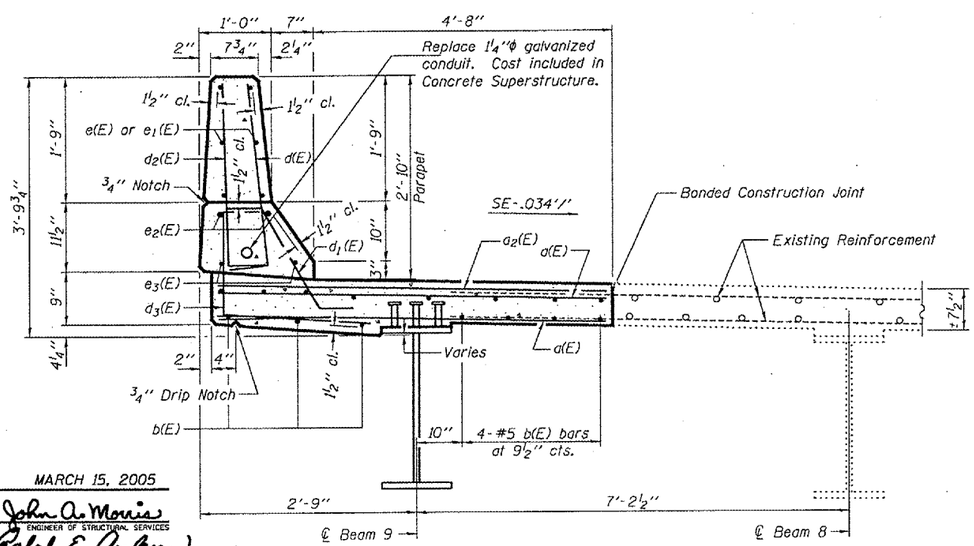

SECTION A-A

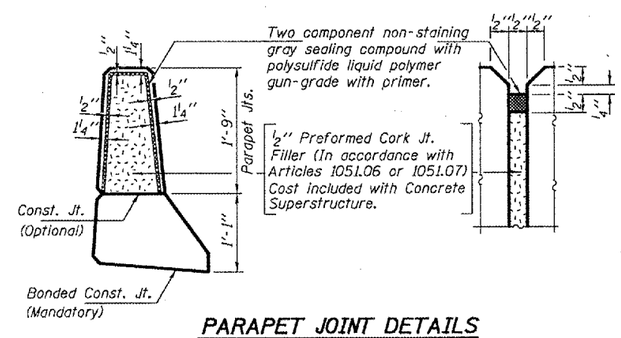

PARAPET JOINT DETAILS

Notes:
Existing reinforcement extending into the removal area shall be cleaned, straightened and incorporated into the new construction. Any reinforcement bars that are damaged during concrete removal shall be replaced with an approved bar splicer or anchorage system. Cost shall be included with Concrete Removal.
Reinforcement Bars designated (E) shall be epoxy coated.
Bars indicated thus 7 x 2-#5 etc. indicates 7 lines of bars with 2 lengths per line.

BILL OF MATERIAL

Bar	No.	Size	Length	Shape
d(E)	196	#5	5'-9"	
$a_1(E)$	14	#5	8'-0"	
$a_2(E)$	61	#6	4'-6"	
b(E)	28	#5	34'-6"	
d(E)	73	#5	3'-0"	
$d_1(E)$	73	#5	2'-7"	
$d_2(E)$	73	#4	3'-0"	
$d_3(E)$	73	#4	3'-9"	
e(E)	6	#4	9'-8"	
$e_1(E)$	24	#4	13'-11"	
$e_2(E)$	4	#8	35'-9"	
$e_3(E)$	4	#5	34'-6"	
Concrete Removal			Cu. Yd.	18.0
Concrete Superstructure			Cu. Yd.	18.0
Reinforcement Bars, Epoxy Coated			Pound	4250

DESIGNED	JSB
CHECKED	PSJ
DRAWN	baliva
CHECKED	JSB PSJ

MARCH 15, 2005
EXAMINED John A. Morris — ENGINEER OF STRUCTURAL SERVICES
PASSED Ralph E. Anderson — ENGINEER OF BRIDGES AND STRUCTURES

SUPERSTRUCTURE DETAILS
IL RTE 137 OVER US RTE 45
LAKE COUNTY
SN 049-0170

\version 7 files\0490170.dgn 3/14/2005 4:22:50 PM