ROUTE NO.	SECT.	COUNTY	SHEET NO.	TOTAL SHEETS
F.A.I. 74	(72-7) R-3	PEORIA	455	1360
FED. ROAD DIST. NO. 7		ILLINOIS	FED. AID PROJECT	

CONTRACT NO. 68200

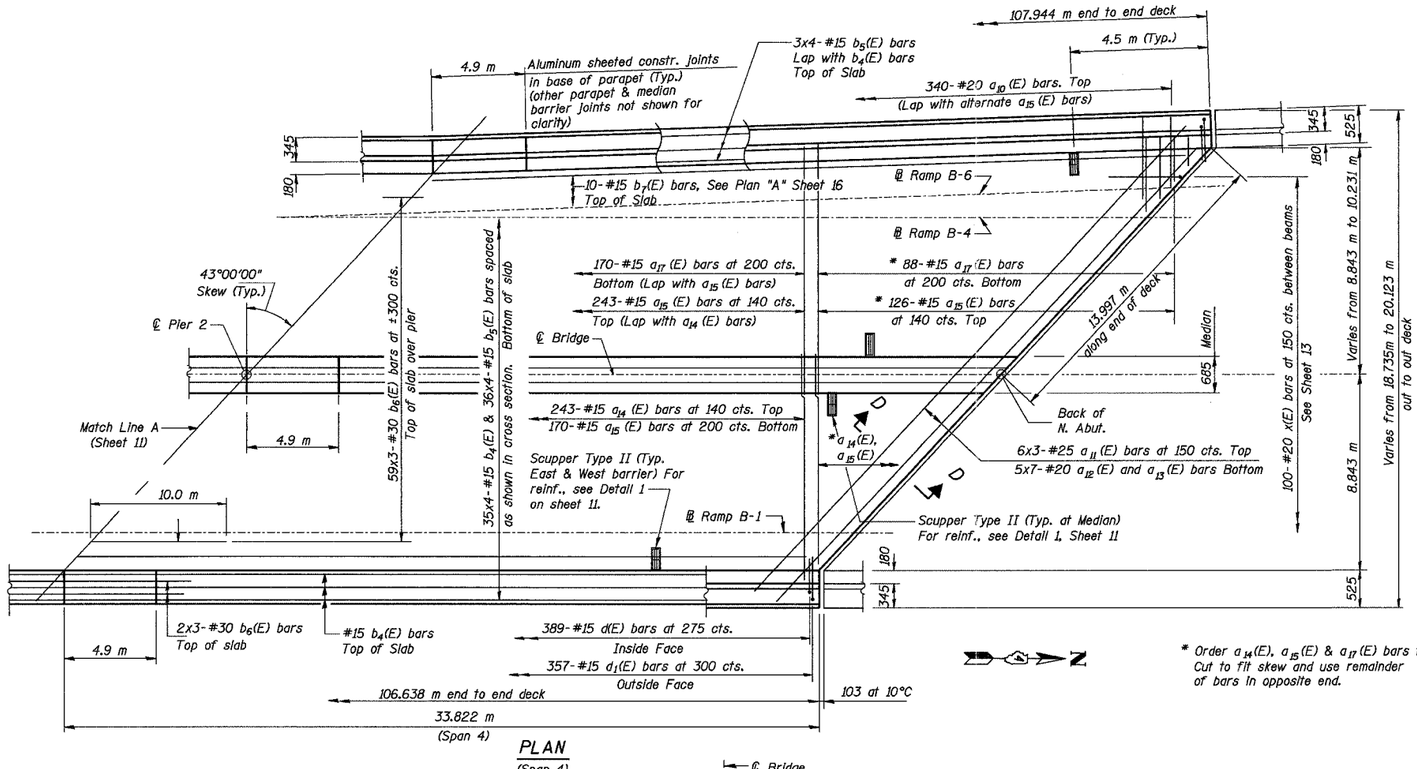

PLAN
(Span 4)

* Order a_{14}(E), a_{15}(E) & a_{17}(E) bars full length. Cut to fit skew and use remainder of bars in opposite end.

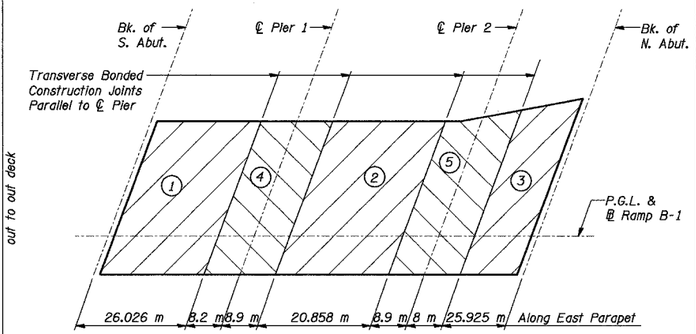

DECK POURING SEQUENCE PLAN

Notes: (DECK POURING)

When the deck pour is stopped for the day at one or more of the transverse Bonded Construction Joints In the deck Pouring Sequence as shown, the next pour shall not be made until both of the following requirements are met:

1. At least 72 hours shall have elapsed from the end of the previous pour.
2. The concrete strength shall have attained a minimum modulus of rupture of 4.5 MPa or a minimum compressive strength of 24 MPa.

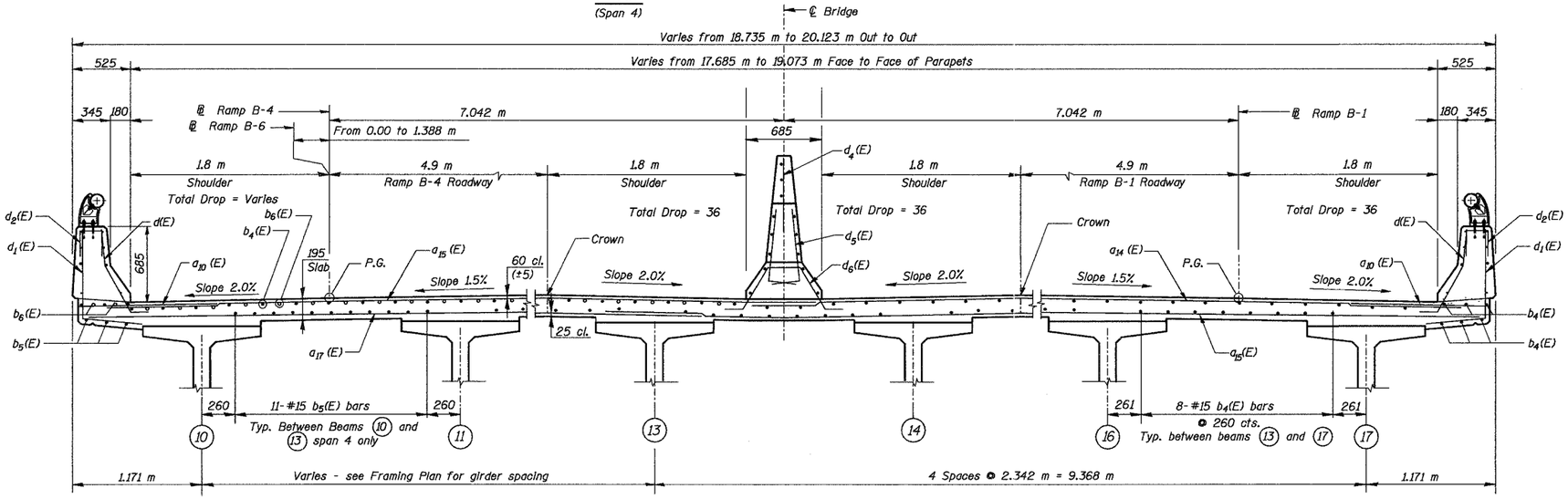

NEAR PIER

NEAR MIDSPAN

CROSS SECTION - SPAN 4
(Looking North)

Notes:

For Superstructure Details and Bill of Material, See Sheet 15.

For Section D-D, See Sheet 13.

Reinforcement bars designated (E) shall be epoxy coated.

Bars indicated thus 20 x 3-#15 etc. indicates 20 lines of bars with 3 lengths per line.

All dimensions are in millimeters (mm) except as noted.

MIN. BAR. LAP
#15 bar = 640
#20 bar = 790
#25 bar = 1.32m
#30 bar = 1.85m

REVISION	DATE	DESCRIPTION

STATE OF ILLINOIS
DEPARTMENT OF TRANSPORTATION

DECK PLAN AND CROSS SECTION - SPAN 4

RAMPS B-1 AND B-4 OVER F.A.I. ROUTE 74 (I-74)
RAMPS A-3 AND B-3

F.A.I. ROUTE 74 SECTION (72-7) R-3 PEORIA COUNTY
STATION 10+779.03 STRUCTURE NUMBER 072-0183

PARSONS TRANSPORTATION GROUP
CHICAGO, ILLINOIS

DRAWING NO.	SCALE	DATE	SHEET NO.
12	N.T.S.	2-18-03	12

Designed by:	AMK
Checked by:	AK
Drafted by:	FTE/SMG
Checked by:	AK

Filename: P:\643996\structural\072-0183\Sheet\Tracings\PS0003-IA072183.dgn
Date: 11/19/2004 Time: 09:58:47 AM