ROUTE NO.	SECT.	COUNTY	SHEET NO.	TOTAL SHEETS
F.A.I. 74	(72-7) R-3	PEORIA	479	1360
FED. ROAD DIST. NO. 7		ILLINOIS	FED. AID PROJECT	

CONTRACT NO. 68200

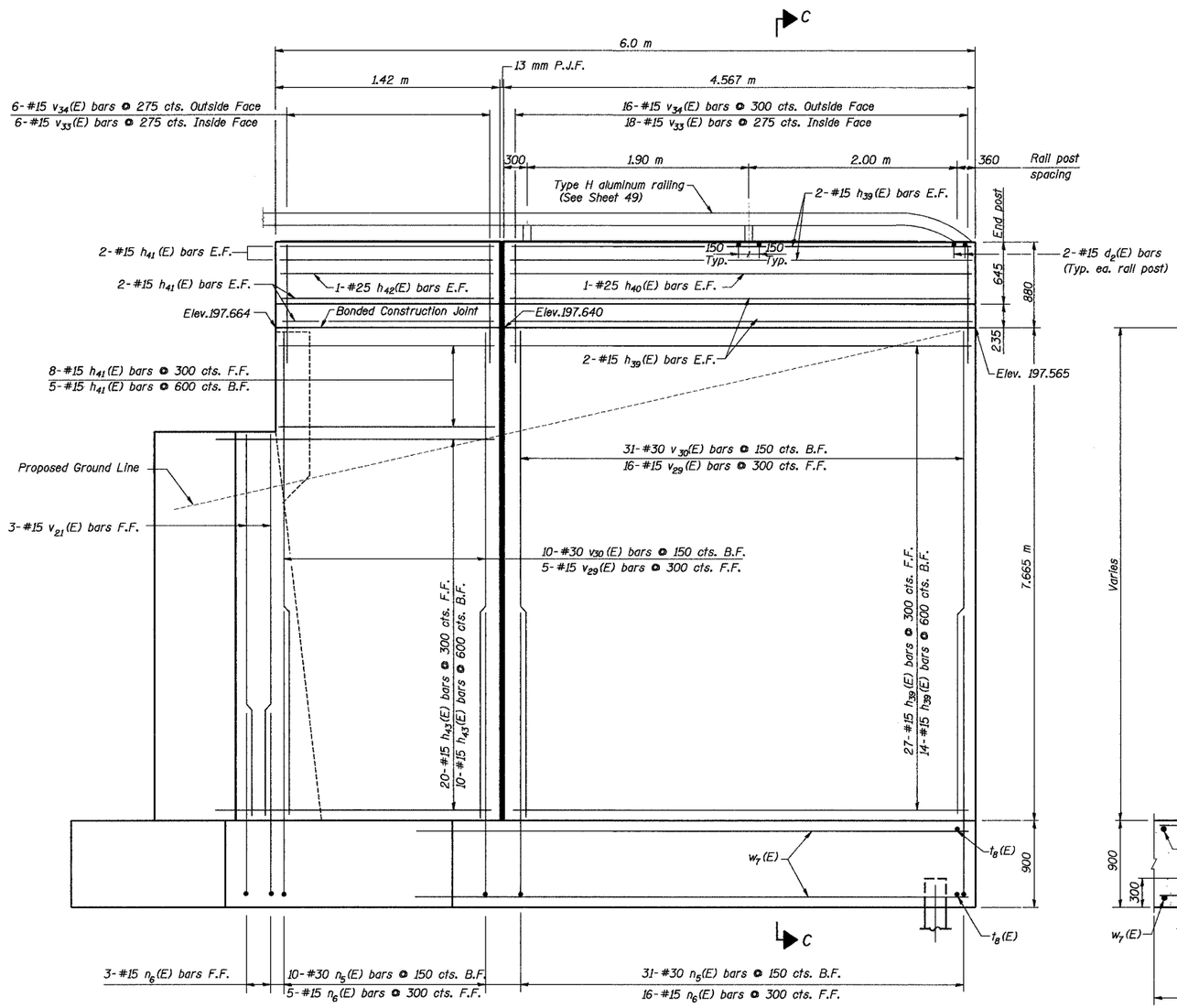

NORTHEAST WINGWALL

(Looking West)

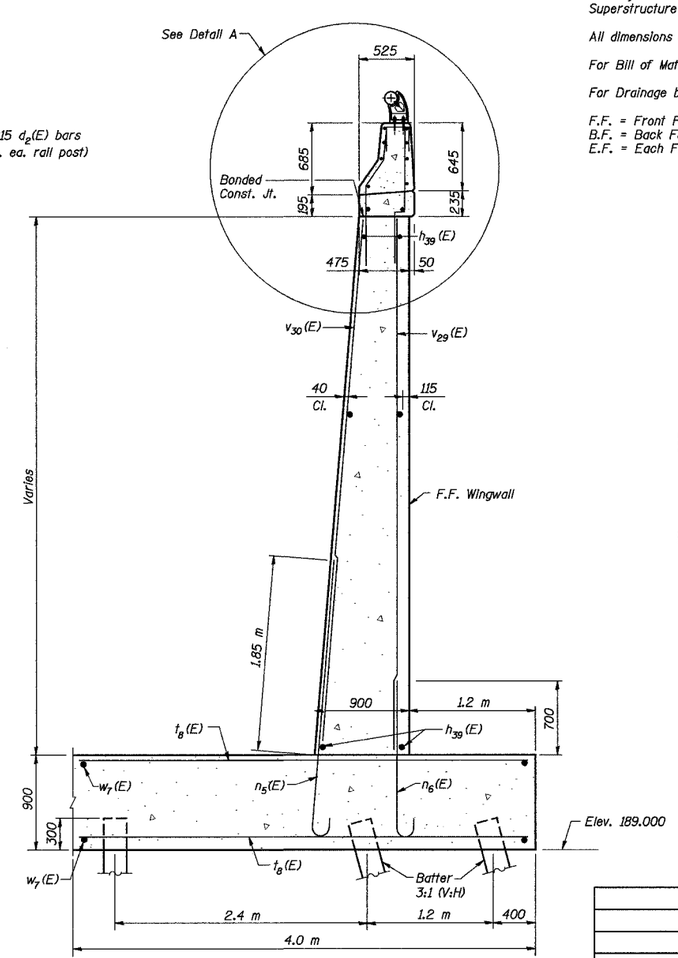

SECTION C-C

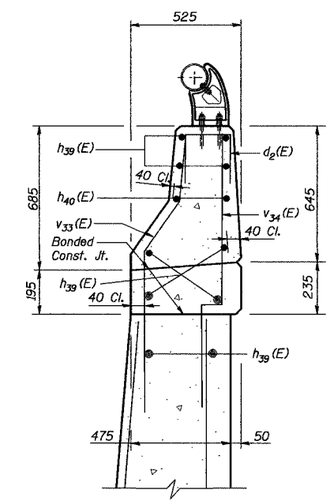

DETAIL A

Notes:

Reinforcement bars designated (E) shall be epoxy coated.

Quantity of concrete in end post included with Concrete Superstructure on Sheet 15.

All dimensions are in millimeters (mm) except as noted.

For Bill of Material see Sheet 38.

For Drainage behind wingwalls see Sheet 35.

F.F. = Front Face
B.F. = Back Face
E.F. = Each Face

MIN. BAR LAP
#15 bar = 640
#30 bar = 1.85 m

REVISION	DATE	DESCRIPTION

STATE OF ILLINOIS
DEPARTMENT OF TRANSPORTATION

NORTH ABUTMENT DETAILS II

RAMPS B-1 AND B-4 OVER F.A.I. ROUTE 74 (I-74)
RAMPS A-3 AND B-3
F.A.I. ROUTE 74 SECTION (72-7) R-3 PEORIA COUNTY
STATION 10+779.03 STRUCTURE NUMBER 072-0183

PARSONS TRANSPORTATION GROUP
CHICAGO, ILLINOIS

DRAWING NO.	SCALE	DATE	SHEET NO.
36	N.T.S.	2-18-03	36

Designed by:	DL
Checked by:	MBQ
Drafted by:	JMG
Checked by:	AK

Filename: P:\643996\structural\072-0183\Sheet1\Tracings\AB0008-IA072183.dgn
Date: 1/19/2004 Time: 10:08:38 AM