ROUTE NO.	SECT.	COUNTY	SHEET NO.	TOTAL SHEETS
F.A.I. 74	(72-7) R-3	PEORIA	517	1360
FED. ROAD DIST. NO. 7		ILLINOIS	FED. AID PROJECT	

CONTRACT NO. 68200

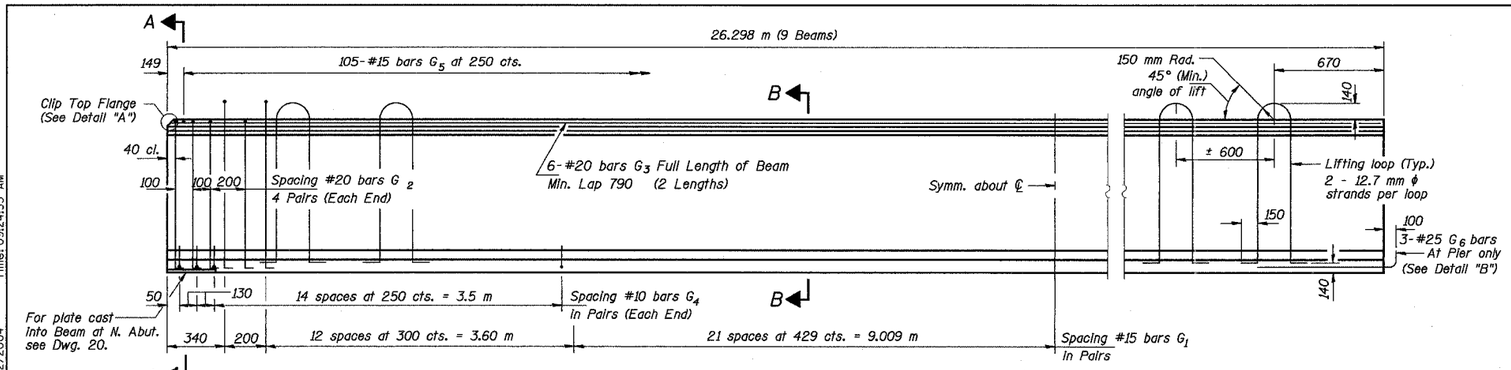

ELEVATION OF BEAM
(Showing Reinforcement & Dimensions)

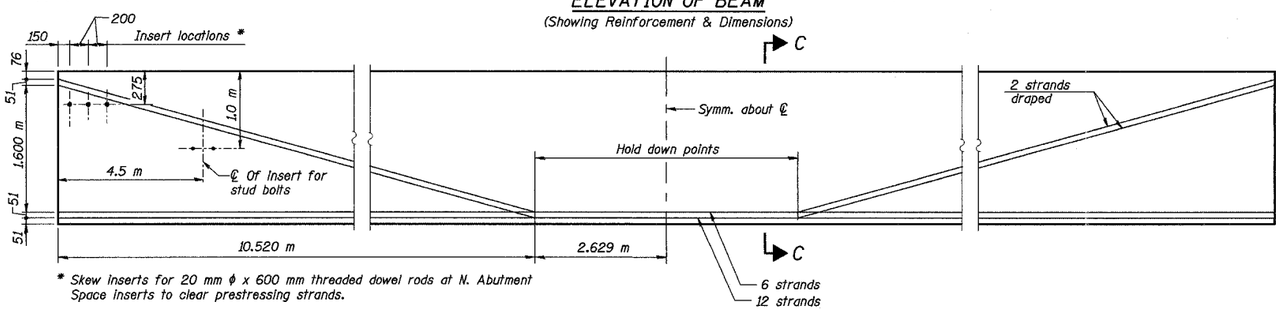

* Skew inserts for 20 mm ϕ x 600 mm threaded dowel rods at N. Abutment
Space inserts to clear prestressing strands.

ELEVATION OF BEAM
(Showing Prestressing Steel)

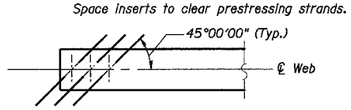

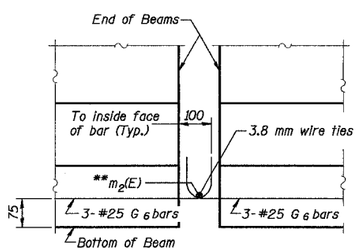

ELEVATION

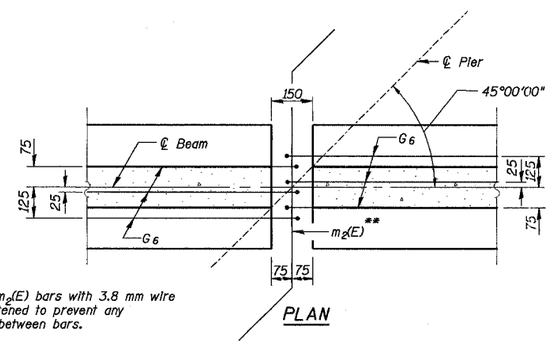

PLAN

**Tie #25 m_2(E) bars with 3.8 mm wire tightly fastened to prevent any movement between bars.

DETAIL "B"

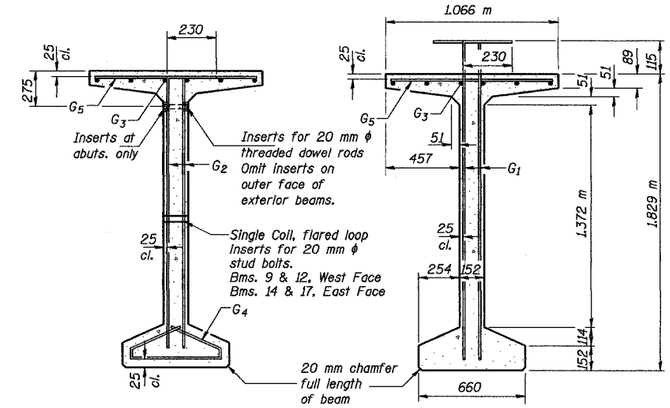

SECTION A-A

SECTION B-B

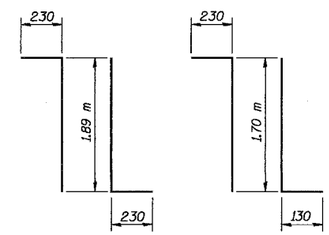

BAR G_1

BAR G_2

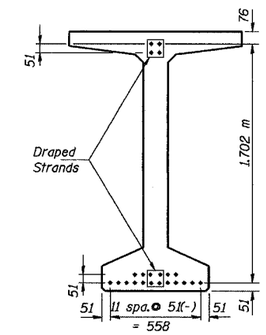

SECTION C-C

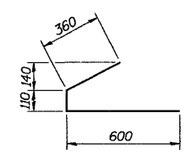

BAR G_4

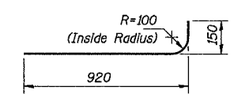

BAR G_6

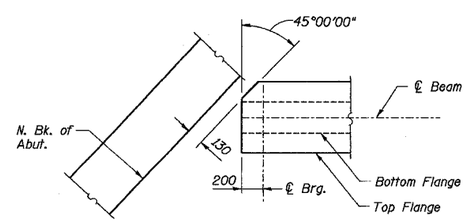

DETAIL "A"

Notes:

All inserts and threaded dowel rods for inserts, reinforcing and Prestressing Steel, and other items which are cast into the Precast Concrete Bulb T-Beams shall be included in the contract unit price per meter of "Furnishing and Erecting Precast Prestressed Concrete Bulb T-Beams, 1829 mm".

Inserts for 20 mm ϕ threaded dowel rods are to be two strut, coil type for interior beams and single coil, flared loop type for exterior beams.

Prestressing steel shall be uncoated high strength, low relaxation 7-wire strand (Fu = 1860 MPa). The nominal diameter shall be 12.7 mm and the nominal cross sectional area shall be 98.71 mm^2.

Required release strength, f'ci, shall be 35 MPa.

Non-prestressing steel shall conform to AASHTO designation M31M, M42M or M53M Grade 400.

Reinforcement bars designated (E) shall be epoxy coated.

Lifting loops shall be 3 - 12.7 mm ϕ strands (Fu = 1860 MPa), as shown.

All dimensions are in millimeters (mm) except as noted.

* BAR LIST

Bar	No.	Size	Length (m)	Shape
G_1	138	#15	2.35	⅂L
G_2	16	#20	2.06	⅂L
G_3	12	#20	13.55	——
G_4	68	#10	1.07	⊂
G_5	105	#15	1.01	—
G_6	3	#25	1.07	⊃

* For one beam only.

BILL OF MATERIAL

Item	Unit	Total
Furnishing and Erecting Precast Prestressed Concrete Bulb T-Beams, 1829 mm	m	236.68

REVISION	DATE	DESCRIPTION

STATE OF ILLINOIS
DEPARTMENT OF TRANSPORTATION

1829 mm PPC BULB T-BEAM SPAN 2

RAMPS B-3 AND B-5 OVER WAR MEMORIAL DR. AND RAMP B-6
F.A.I. ROUTE 74 SECTION (72-7) R-3
PEORIA COUNTY STA. 10+618.61 (RAMP B-3)
STA. 10+472.60 (RAMP B-5)
STRUCTURE NUMBER 072-0190

PARSONS TRANSPORTATION GROUP
CHICAGO, ILLINOIS

DRAWING NO.	SCALE	DATE	SHEET NO.
18	N.T.S.	2-21-03	18

Designed by:	WEE
Checked by:	AMK
Drafted by:	FTE/JMG
Checked by:	WEE

Filename: P:\643996\structural\072-0190\sheet\Tracings\SD0008-1A0720190.dgn
Date: 11/22/2004 Time: 09:24:33 AM