F.A.I. RTE.	SECTION	COUNTY	TOTAL SHEETS	SHEET NO.
74	(72-7)R-3	PEORIA	1360	727
STA.		TO STA.		
FED. ROAD DIST. NO.		ILLINOIS	FED. AID PROJECT	

PAVEMENT MARKING LEGEND

- (1) PROPOSED 150 mm SKIP DASH WHITE
- (1E) EXISTING 150 mm SKIP DASH WHITE (TO REMAIN)
- (1R) EXISTING 150 mm SKIP DASH WHITE (TO BE REMOVED)
- (2) PROPOSED 100 mm SOLID WHITE
- (2E) EXISTING 100 mm SOLID WHITE (TO REMAIN)
- (2R) EXISTING 100 mm SOLID WHITE (TO BE REMOVED)
- (3) PROPOSED 100 mm SOLID YELLOW
- (3E) EXISTING 100 mm SOLID YELLOW (TO REMAIN)
- (3R) EXISTING 100 mm SOLID YELLOW (TO BE REMOVED)
- (4) PR. 100 mm SOLID, PAINT, WHITE (LOCATED ON TEMP. CONC. BARRIER)
- (4E) EX. 100 mm SOLID, PAINT, WHITE (LOCATED ON TEMP. CONC. BARRIER)
- (6) PR. 100 mm SOLID, PAINT, YELLOW (LOCATED ON TEMP. CONC. BARRIER)
- (6E) EX. 100 mm SOLID, PAINT, YELLOW (LOCATED ON TEMP. CONC. BARRIER)

NOTE:
ALL PAVEMENT MARKINGS TO BE PAVEMENT MARKING TAPE, TYPE III UNLESS OTHERWISE NOTED IN PLANS (SEE MAINTENANCE OF TRAFFIC SHEETS).

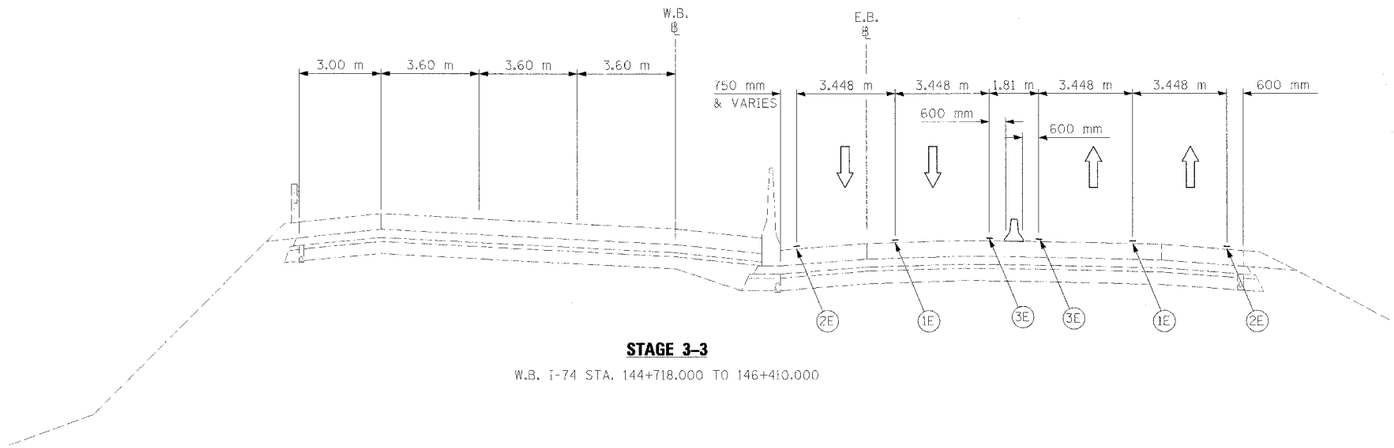

STAGE 3-3

W.B. I-74 STA. 144+718.000 TO 146+410.000

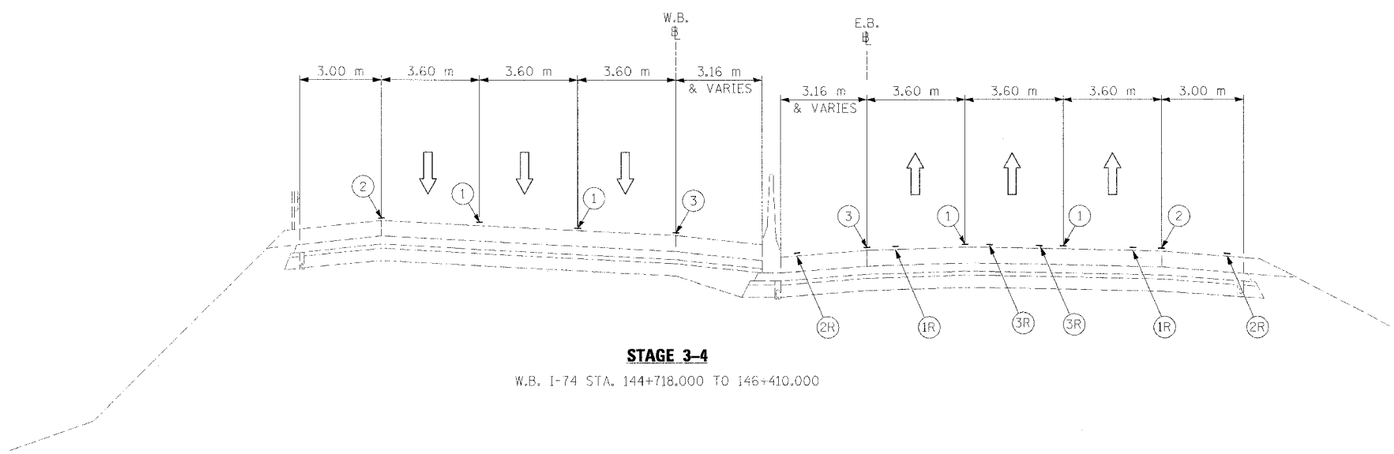

STAGE 3-4

W.B. I-74 STA. 144+718.000 TO 146+410.000

LEGEND

	CONSTRUCTION THIS STAGE		PAVEMENT MARKING
	DRUM WITH STEADY BURNING MONODIRECTIONAL LIGHT		VERTICAL PANEL
	DIRECTION OF TRAFFIC		TEMPORARY CONCRETE BARRIER

CLARK ENGINEERS, INC.

REVISIONS	
NAME	DATE

ILLINOIS DEPARTMENT OF TRANSPORTATION

M.O.T. TYPICAL SECTIONS
FAI ROUTE 74 (I-74)
WB STA. 144+718.000 TO
STA. 146+410.000

DRAWN BY RDY
CHECKED BY LSA
DATE 11/23/04