F.A.I. RTE.	SECTION	COUNTY	TOTAL SHEETS	SHEET NO.
74	(72-7)R-3	PEORIA	1360	1008
STA.		TO STA.		
FED. ROAD DIST. NO.		ILLINOIS	FED. AID PROJECT	

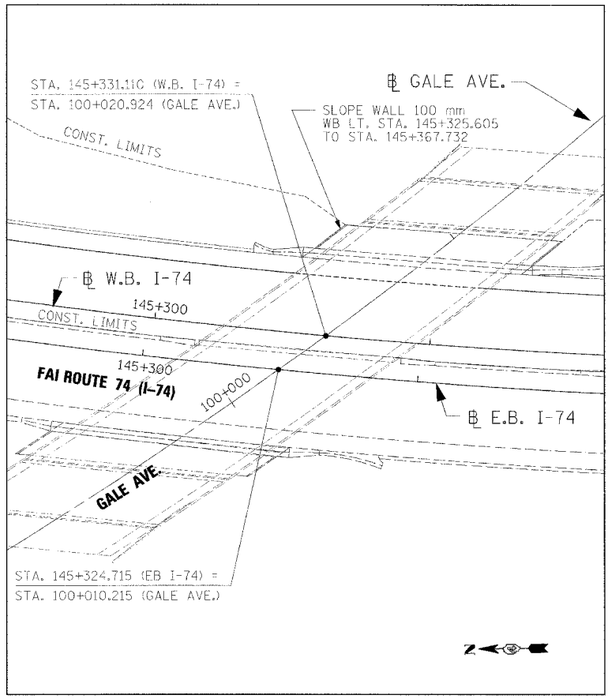

PLAN VIEW

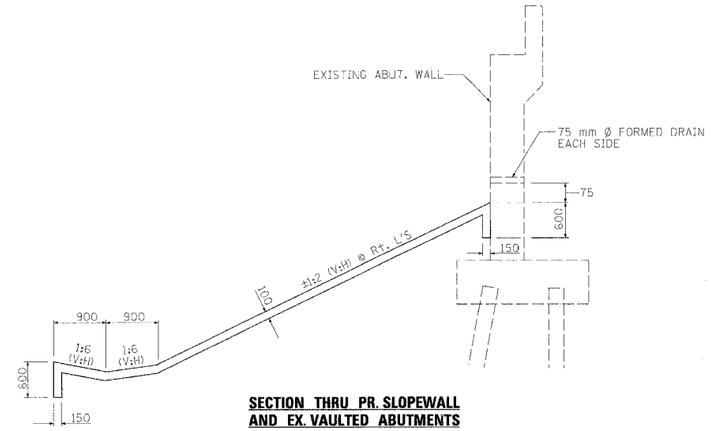

SECTION THRU PR. SLOPEWALL AND EX. VAULTED ABUTMENTS

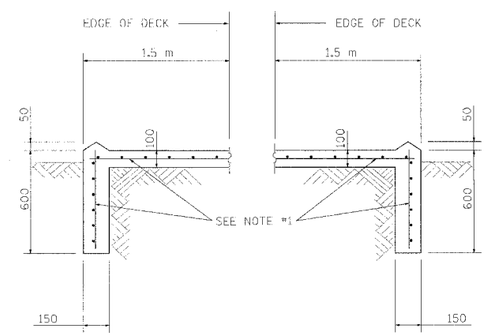

SECTION THROUGH SLOPEWALL PERPENDICULAR TO BRIDGE DECK

BILL OF MATERIAL

ITEM	UNIT	QUANTITY
SLOPE WALL 100 MM	M2	276

NOTES:

1. SLOPE WALL SHALL BE REINFORCED WITH WELDED WIRE FABRIC, 152 X 152 - MW25.8 X MW25.8, WITH A MASS OF 2.91 KG/M2. (COST INCLUDED WITH SLOPE WALL 100 MM)
2. ALL DIMENSIONS ARE IN MILLIMETERS (MM) UNLESS OTHERWISE NOTED.
3. SEE THE STANDARD SPECIFICATIONS FOR ROAD AND BRIDGE CONSTRUCTION FOR ADDITIONAL SLOPE WALL INFORMATION.

REVISIONS	
NAME	DATE

CLARK ENGINEERS, INC.

ILLINOIS DEPARTMENT OF TRANSPORTATION

GALE AVENUE
SLOPE WALL 100 MM DETAIL SHEET

DATE 11/23/04

DRAWN BY CAM
CHECKED BY RDY