F.A.I. RTE.	SECTION	COUNTY	TOTAL SHEETS	SHEET NO.
74	(72-7)R-3	PEORIA	1360	1229
STA.		TO STA.		
FED. ROAD DIST. NO.		ILLINOIS	FED. AID PROJECT	

CONTRACT NO. 68200

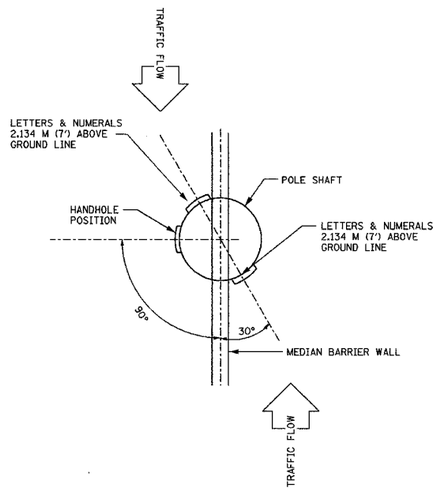

POSITION OF HANDHOLE AND POLE NUMBER
FOR MEDIAN MOUNTED POLES

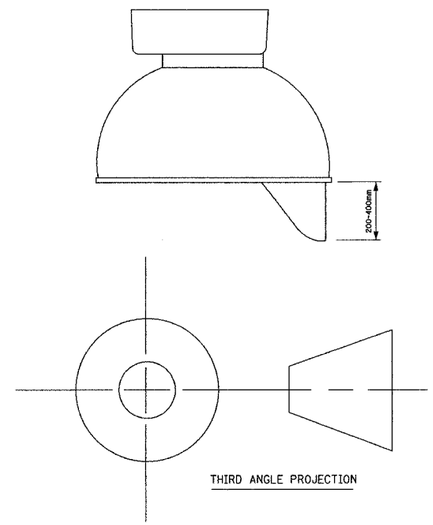

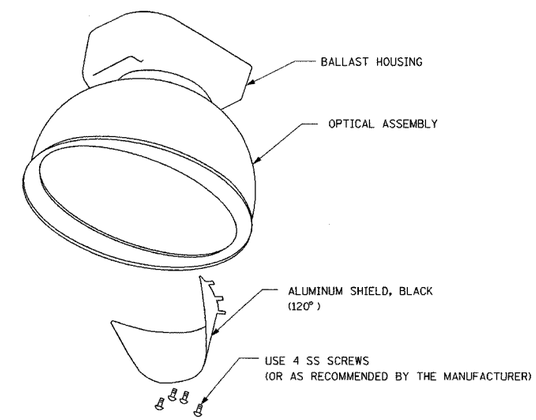

LUMINAIRE SHIELD DETAIL

* THE COST OF THE SHIELD SHALL BE INCLUDED IN THE PAY ITEM FOR HIGH MAST LUMINAIRE.

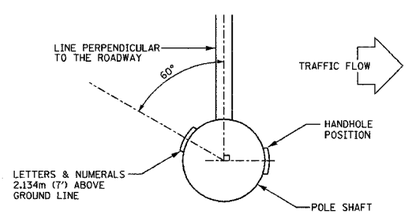

POSITION OF HANDHOLE AND POLE NUMBER
FOR IN-FIELD POLES

LIGHTING SHEET 45 OF 64

REVISIONS	
NAME	DATE

ILLINOIS DEPARTMENT OF TRANSPORTATION

MISCELLANEOUS HIGH MAST POLE AND LUMINAIRE DETAILS

DATE: 11/12/04

DRAWN BY DJK

CHECKED BY MKR

alfred benesch & company
CONSULTING ENGINEERS
205 NORTH MICHIGAN AVENUE, CHICAGO, ILLINOIS 60601

m:\proj\3573\lighting\74\contract 10\11000hmdet4.dgn 4:13:17 PM 11/12/2004

\\contract 10\11000hmdet4.dgn 11/12/2004 4:13:17 PM