ROUTE No.	SECTION	COUNTY	TOTAL SHEETS	SHEET NO.
FAI 74	*	PEORIA	1360	1308
STA.		TO STA.		
F.H.W.A. REGION		ILLINOIS	PROJECT	
*(72-7)R-3		CONTRACT NO. 68200		

Walkway Grating, Walkway Supports, Handrail and Lighting are not included in this contract.

STATE OF ILLINOIS
DEPARTMENT OF TRANSPORTATION

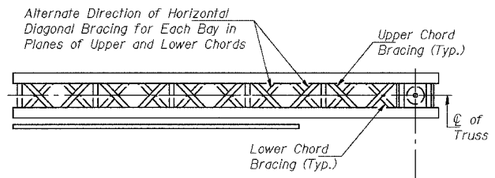

TYPICAL PLAN

(Walkway not shown)

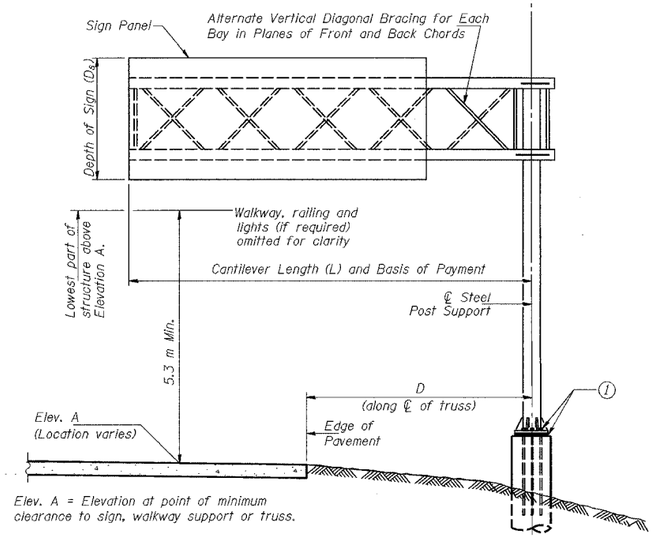

Elev. A = Elevation at point of minimum clearance to sign, walkway support or truss.

TYPICAL ELEVATION

Looking in Direction of Traffic

Sign support structures may be subject to damaging vibrations and oscillations when sign panels are not in place during erection or maintenance of the structure. To avoid these attach temporary blank sign panels or other bracing to the structure until permanent signs are installed.

Structure Number	Station	Design Truss Type	Cantilever Length (L)(m)	Elev. A	Dim. D (m)	D_s (m)	Total Sign Area (sq m)
4C072I074L089.3	143+740	II-C-S	7.877	189.708	3.677	2.591	10.88

Truss Type	Maximum Sign Area	Maximum Length
I-C-S	15.8 m^2	7.6 m
II-C-S	31.6 m^2	9.2 m
III-C-S	37.2 m^2	12.2 m

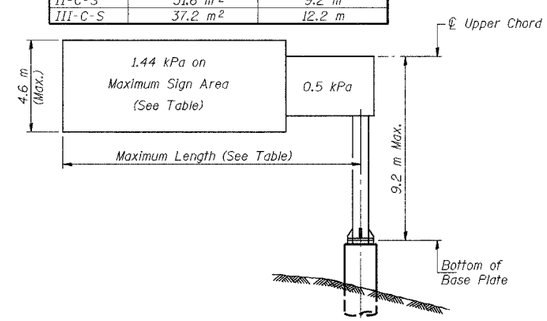

DESIGN WIND LOADING DIAGRAM

Parameters shown are basis for I.D.O.T. Standards. Installations not within dimensional limits shown require special analysis for all components.

(1) After adjustments to level truss and insure adequate vertical clearance, all top and leveling nuts shall be tightened against the base plate with a minimum torque of 270 N · m. Stainless steel mesh shall then be placed around the perimeter of the base plate. Secure to base plate with stainless steel banding.

Note: Trusses shall be shipped individually with adequate provision to prevent detrimental motion during transport. This may require ropes between horizontals and diagonals or energy dissipating (elastic) ties to the vehicle. The contractor is responsible for maintaining the configuration and protection of the trusses.

GENERAL NOTES

SPECIFICATIONS:

DESIGN: AASHTO Standard Specifications for Structural Supports for Highway Signs, Luminaires and Traffic Signals. ("AASHTO Specifications")

MEASUREMENTS: All dimensions are in millimeters (mm) except as noted.

CONSTRUCTION: Current (at time of letting) Illinois Department of Transportation Standard Specifications for Road and Bridge Construction, Supplemental Specifications and Special Provisions. ("Standard Specifications")

LOADING: 145 km/h WIND VELOCITY
WIND LOADING: 1.44 kPa normal to Sign Panel Area and truss elements not behind sign Loading Diagram.
WALKWAY LOADING: Dead load plus 2.2 kN. concentrated live load.

ALLOWABLE UNIT STRESSES:
Structural Steel - 138 MPa
Reinforcing Steel - 138 MPa
Class SI Concrete - 10 MPa
Allowable unit stresses due to wind load in combination with other forces, are increased 1.33.

MINIMUM CLEARANCE: Vertical Roadway Clearance = 5.3 m (All Obstructions)

WELDING: All welds to be continuous unless otherwise shown. All welding to be done according to the current AWS D1.1 Structural Welding Code (Steel) and the Standard Specificiations.

MATERIALS: All Structural Steel Pipe shall be ASTM A53 Grade B with a Minimum yield of 241 MPa., or A500 Grade B or C with a minimum yield of 319 MPa. If A500 pipe is substituted for A53, then the outside diameter shall be as detailed and wall thickness greater than or equal to A53.

All Structural Steel Plates and Shapes shall conform to AASHTO M270 Gr. 250, Gr. 345 or Gr. 345W**. Stainless steel for handhole covers shall be ASTM A240, Type 302 or 304, or another alloy suitable for exterior exposure and acceptable to the Engineer.

The steel pipe and stiffening ribs at the base plate for the column shall have a minimum longitudinal Charpy V-Notch (CVN) energy of 20 J at 5° C. (Zone 2) before galvanizing.

FASTENERS FOR STEEL TRUSSES: All bolts noted as "high strength" (HS) must satisfy the requirements of AASHTO M164 (ASTM A325M), ASTM A449, or approved alternate, and must have matching lock nuts and washers. All bolts, u-bolts, eye bolts, lock nuts and washers not required to be high strength must satisfy the requirements of ASTM A307. All bolts, u-bolts, eye bolts, lock nuts and washers must be hot dip galvanized per AASHTO M232. All lock nuts must have nylon or steel inserts. High strength bolt and stud installation shall conform to Article 505.04(f)(2)d of the IDOT Standard Specifications for Road and Bridge Construction. Rotational Capacity ("ROCAP") testing of bolts will not be required.

GALVANIZING: All Steel Grating, Plates, Shapes and Pipe shall be Hot Dip Galvanized after fabrication according to AASHTO M111.

PAINTING: All steel members shall be painted according to the Special Provision "Surface Preparation and Painting of Galvanized Steel Traffic Structures". Cost Included in "Overhead Sign Structure . . . ".

ANCHOR RODS: Shall conform to AASHTO M314 Gr. 380 (55) with a minimum Charpy V-Notch (CVN) energy of 20 J at -12° C.

CONCRETE SURFACES: All concrete surfaces above an elevation 150 mm below the lowest final ground line at each foundation shall be cleaned and coated with Bridge Seat Sealer according to the Standard Specifications.

REINFORCEMENT BARS: Reinforcement Bars designated (E) shall be epoxy coated according to the Standard Specifications.

**If M270 Gr. 345W steel is proposed, chemistry for plate to be used shall first be approved by the Engineer as suitable for galvanizing and welding.

TOTAL BILL OF MATERIAL
CANTILEVER STEEL TRUSS

	ITEM	UNIT	TOTAL
	OVERHEAD SIGN STRUCTURE-CANTILEVER, TYPE I-C-S (0.61M x 1.37M)	m	
(2)	OVERHEAD SIGN STRUCTURE-CANTILEVER, TYPE II-C-S (0.90M x 1.68M)	m	7.88
	OVERHEAD SIGN STRUCTURE-CANTILEVER, TYPE III-C-S (0.90M x 2.14M)	m	
	OVERHEAD SIGN WALKWAY-CANTILEVER TYPE S	m	
(3)	DRILLED SHAFT CONCRETE FOUNDATIONS	m^3	11.08

(2) See Special Provision "Overhead Sign Structures-Special".
(3) Quantity includes median foundation. See Signing Sheet 69 of 83.

DESIGNED	RJW	
CHECKED	KJN	
DRAWN	RJW	
CHECKED	KJN	

OSC-S-1(M) 10/1/2001

2004
EXAMINED
ENGINEER OF STRUCTURAL SERVICES
PASSED
ENGINEER OF BRIDGES AND STRUCTURES

NUMBER	REVISION	DATE

SIGNING SHEET 60 OF 83

CANTILEVER SIGN STRUCTURES
GENERAL PLAN & ELEVATION
STEEL TRUSS & STEEL POST

ILLINOIS DEPARTMENT OF TRANSPORTATION

SIGNING PLAN
W.B. I-74 STA. 143+740
S.N. 4C072I074L089.3

PEORIA CO., IL. DATE: 11-11-04

M:/Proj3573/Sign Structures/Contract 10/sp1002-7Acan-sti.dgn