STATE OF ILLINOIS
DEPARTMENT OF TRANSPORTATION

| ROUTE No. | SECTION | COUNTY | TOTAL SHEETS | SHEET NO. |
|---|---|---|---|---|
| FAI 74 | * | PEORIA | 1360 | 1319 |
| STA. | | TO STA. | | |
| F.H.W.A. REGION | | ILLINOIS | PROJECT | |

*(T2-7)R-3 CONTRACT NO. 68200

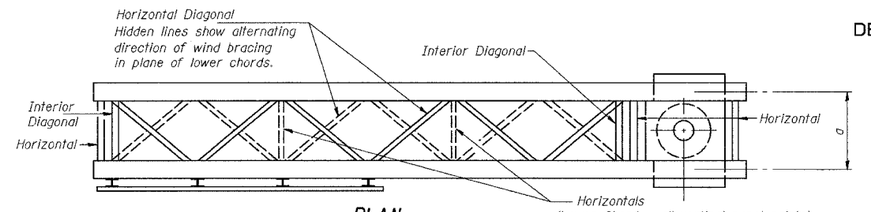


## PLAN

(Walkway not shown)

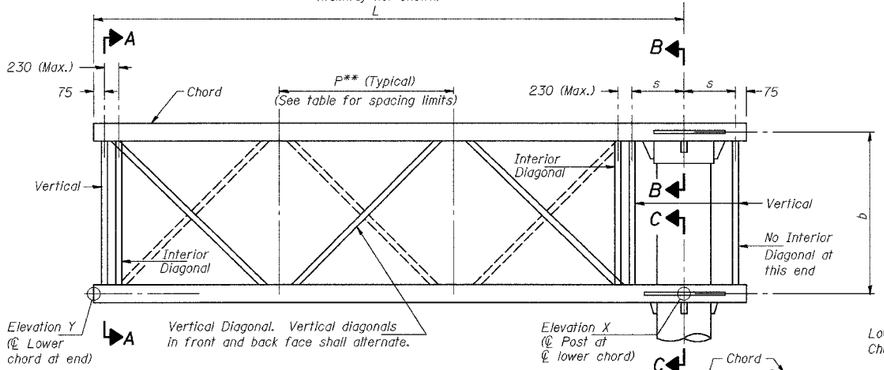


## ELEVATION

(Sign and walkway omitted for clarity)

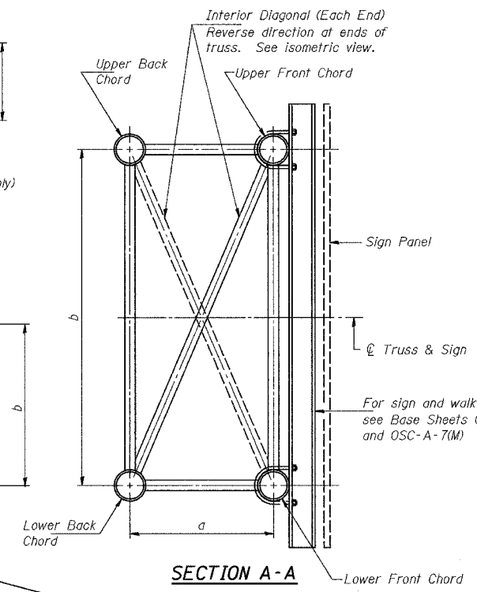


## SECTION A-A

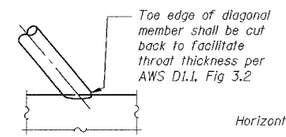


## DETAIL A

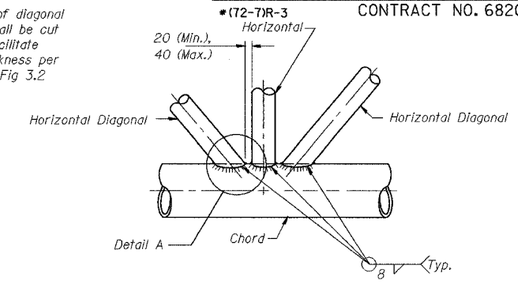


## TRUSS INTERIOR JOINT DETAILS

All diagonals shall be detailed for minimum offset from the panel point based on the following: Offset shall be such as to provide a 20 mm minimum to 40 mm maximum clearance between any diagonal and any horizontal or vertical member, and to provide clearance for U-bolt connections of signs or walkway brackets.

| Structure Number | Station | Truss Type | Design Length (L) | Number of Panels Per Unit | Panel Length (P)** |
|---|---|---|---|---|---|
| 4C072U150R024.7 | 39+700 | III-C-A | 10.80 | 7 | 1.456 |
| 4C072U150R024.9 | 40+105 | III-C-A | 11.84 | 8 | 1.404 |

## TYPICAL TRUSS UNIT

For Section B-B and Section C-C, see Base Sheet OSC-A-3(M).

Note: There are twice as many horizontal diagonals as ther are vertical diagonals.

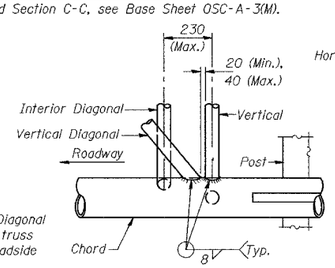


## POST END JOINT DETAIL

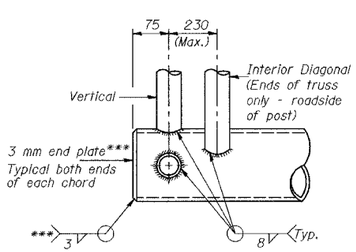


## CANTILEVER END JOINT DETAIL

***Contractor may alternatively use standard aluminum drive-fit cap to close ends.

## SHOP CAMBER TABLE

| Unit Length (L) | Shop Camber at End |
|---|---|
| 4.6 | 40 |
| 4.9-5.2 | 45 |
| 5.5-6.1 | 50 |
| 6.4-6.7 | 60 |
| 7.0-7.6 | 65 |
| 7.9-8.2 | 70 |
| 8.5-9.1 | 76 |
| 9.5-9.8 | 83 |
| 10.1-10.7 | 90 |
| 10.8-11.5 | 102 |
| 11.6-12.2 | 114 |




## CAMBER DIAGRAM

(For Fabrication Only)

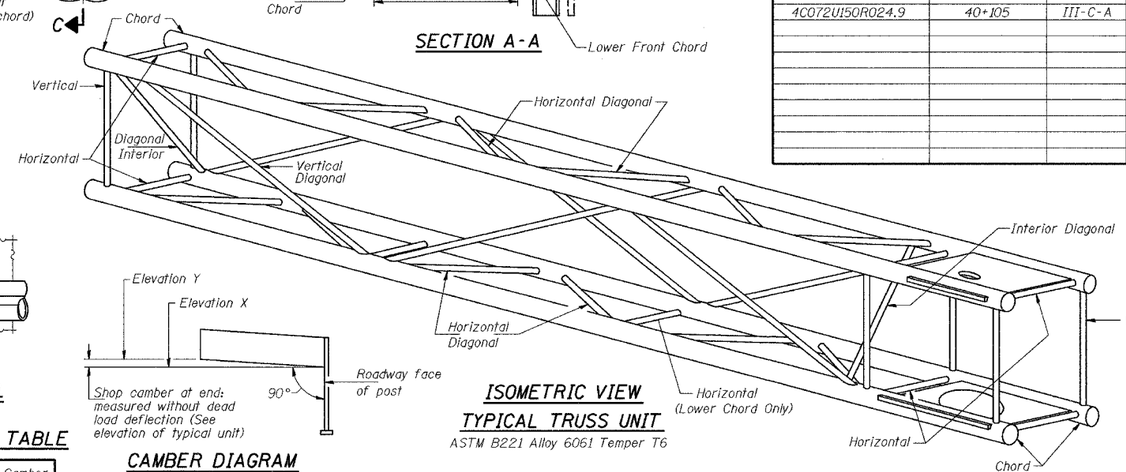


## ISOMETRIC VIEW
## TYPICAL TRUSS UNIT

ASTM B221 Alloy 6061 Temper T6

## TRUSS UNIT TABLE

| Truss Type | Dimension "a" | Dimension "b" (m) | Dimension "s" | Limits for Panel Spacing (P)** (m) | Up. & Low. Chord O.D. | Up. & Low. Chord Wall | Verticals; Horizontals; Vertical, Horizontal, and Interior Diagonals O.D. | Verticals; Horizontals; Vertical, Horizontal, and Interior Diagonals Wall |
|---|---|---|---|---|---|---|---|---|
| I-C-A | 610 | 1.37 | 405 | 0.915 Min. to 1.22 Max. | 127 | 8 | 64 | 8 |
| II-C-A | 915 | 1.68 | 535 | 1.07 Min. to 1.37 Max. | 165 | 8 | 83 | 8 |
| III-C-A (10.7 Max.) | 915 | 2.13 | 535 | 1.22 Min. to 1.68 Max. | 178 | 10 | 89 | 10 |
| III-C-A (>10.7 to 12.2) | 915 | 2.13 | 535 | 1.22 Min. to 1.68 Max. | 203 | 10 | 89 | 10 |

$$**P = \frac{L - s - 75}{\#\ \text{Panels}}$$

| NUMBER | REVISION | DATE |
|---|---|---|
| | | |

SIGNING SHEET 71 OF 83

| | | |
|---|---|---|
| DESIGNED | RJW | |
| CHECKED | KJN | |
| DRAWN | RJW | |
| CHECKED | KJN | |

EXAMINED 2004
ENGINEER OF STRUCTURAL SERVICES

PASSED
ENGINEER OF BRIDGES AND STRUCTURES

OSC-A-2(M) 11/1/2002

CANTILEVER SIGN STRUCTURES
TRUSS DETAILS
ALUMINUM TRUSS & STEEL POST

ILLINOIS DEPARTMENT OF TRANSPORTATION

SIGNING PLAN

WAR MEMORIAL DR. STA. 39+700, 4C072U150R024.7
WAR MEMORIAL DR. STA. 40+105, 4C072U150R024.9

PEORIA CO., IL. DATE: 11-11-04

M:/Proj3573/Sign Structures/Contract 10/sp1003-7Acan-alm.dgn