68383

| F.A.P. RTE. | SECTION | COUNTY | TOTAL SHEETS | SHEET NO. |
|---|---|---|---|---|
| 693 | * | TAZEWELL | — | 26 |
| STA. 856+50 | | TO STA. 862+50 | | |
| FED. ROAD DIST. NO. | ILLINOIS | FED. AID PROJECT | | |

* D4 CULVERT EXT. / REPAIR 2005-2

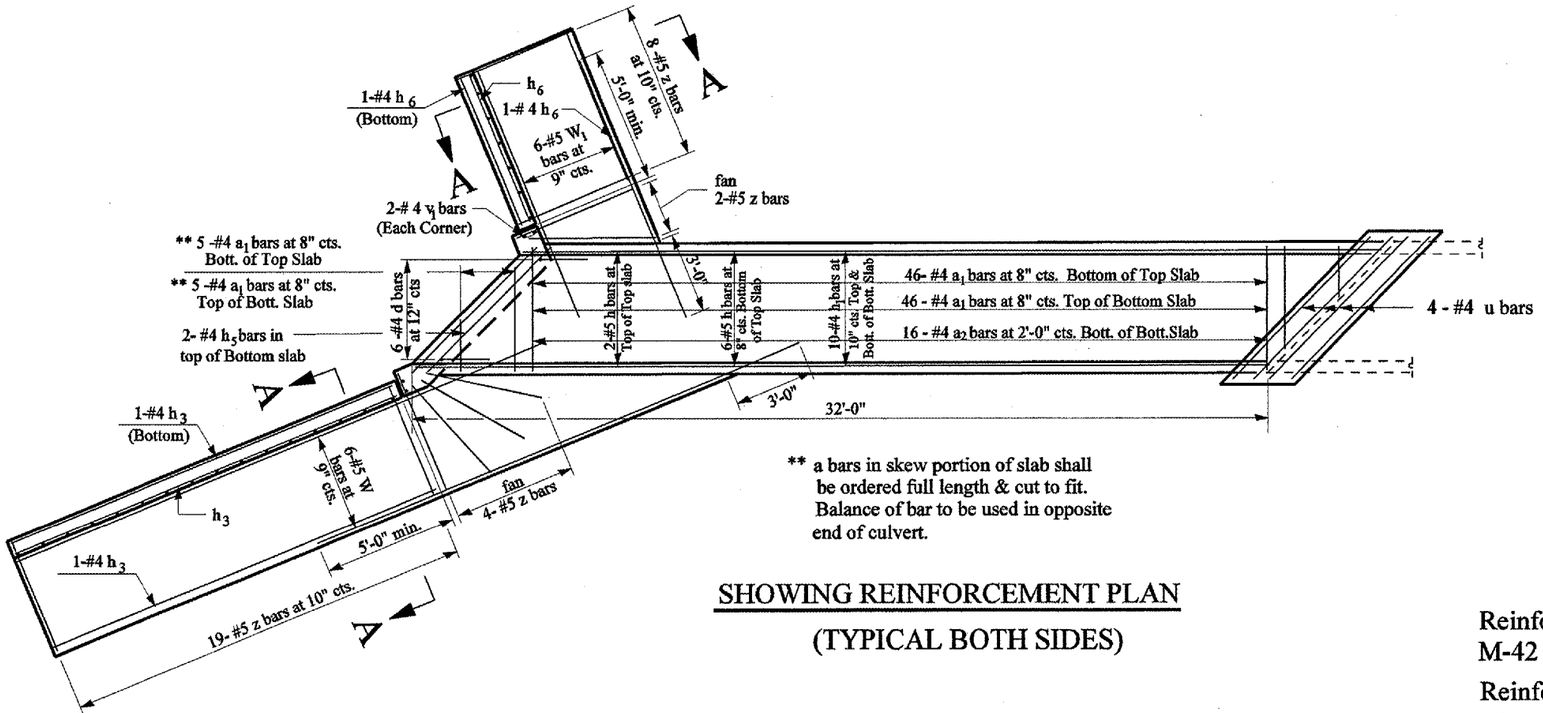


** a bars in skew portion of slab shall be ordered full length & cut to fit. Balance of bar to be used in opposite end of culvert.

## SHOWING REINFORCEMENT PLAN

(TYPICAL BOTH SIDES)

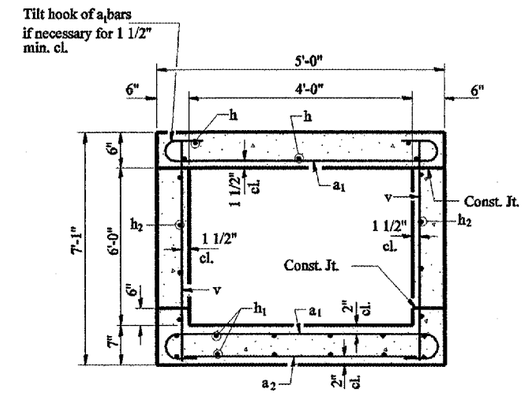


SECTION THRU BARREL

## NOTES

Reinforcement Bars shall conform to the requirements of AASHTO M-31, M-42 or M-53, Grade 60.

Reinforcement bars designated (E) shall be epoxy coated.

All construction joints shall be bonded.

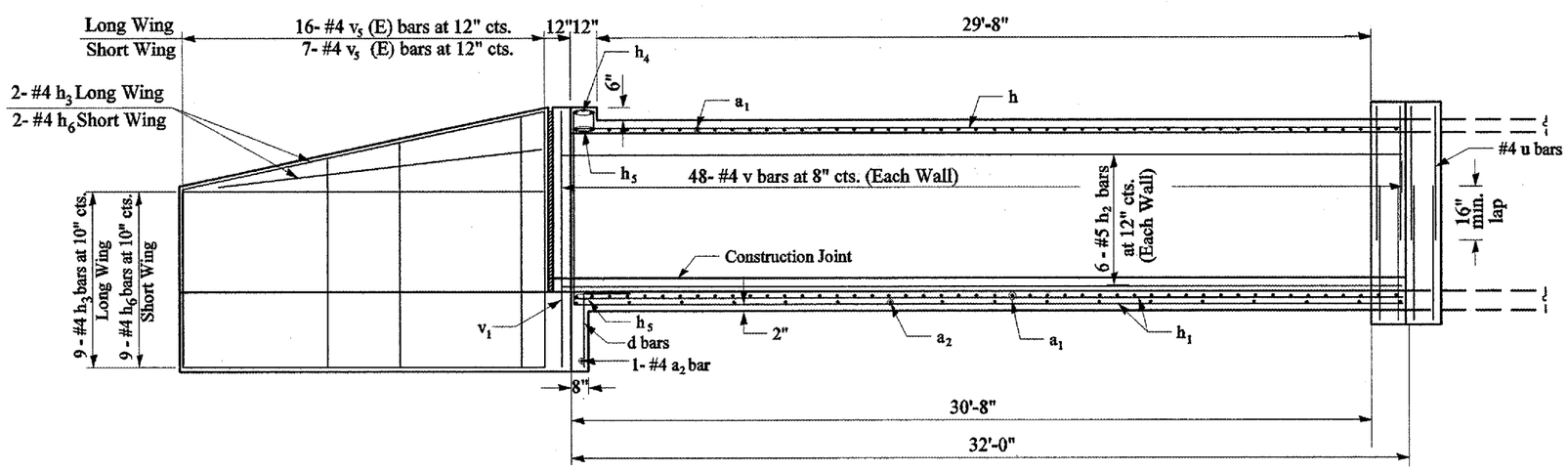


## LONGITUDINAL SECTION (TYPICAL BOTH SIDES)

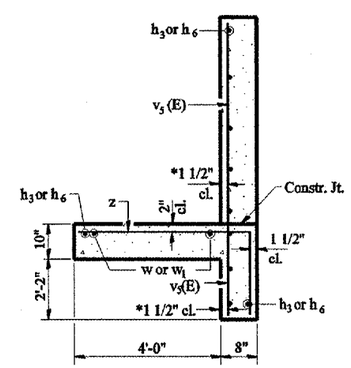


SECTION A-A

*v bars shall not be placed more than 1 1/2" cl. from back face of wingwall.

CULVERT EXTENSION DETAILS
STA. 860+23
LOCATION #4

PLAN — SURVEYED / PLOTTED / ALIGNMENT CHECKED / RT. OF WAY CHECKED / CADD FILE NAME / NOTE BOOK NO. / BY / DATE

PROFILE — SURVEYED / PLOTTED / GRADES CHECKED / B.M. NOTED / STRUCTURE NOTATNS CHKD / NOTE BOOK NO. / BY / DATE