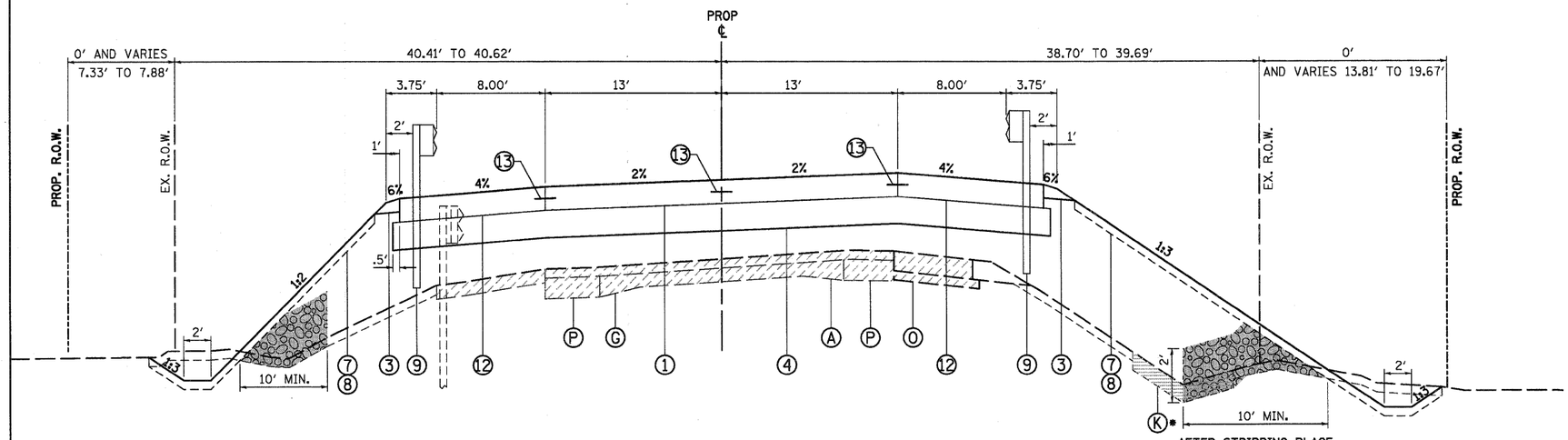

AFTER STRIPPING PLACE GEOTEXTILE FABRIC AND 2' PGE SUBGRADE PRIOR TO PLACING EMBANKMENT.
STA. 437+00 TO STA. 440+50
STA. 442+20 TO STA. 443+00
LEFT AND RIGHT SIDES

ILLINOIS ROUTE 173
STA. 436+63.06 TO STA. 440+88.00
STA. 442+05.00 TO STA. 445+09.08

*CONCRETE PAVED DITCH REMOVAL
STA. 442+88.52 TO STA. 445+09.08 (RT.)

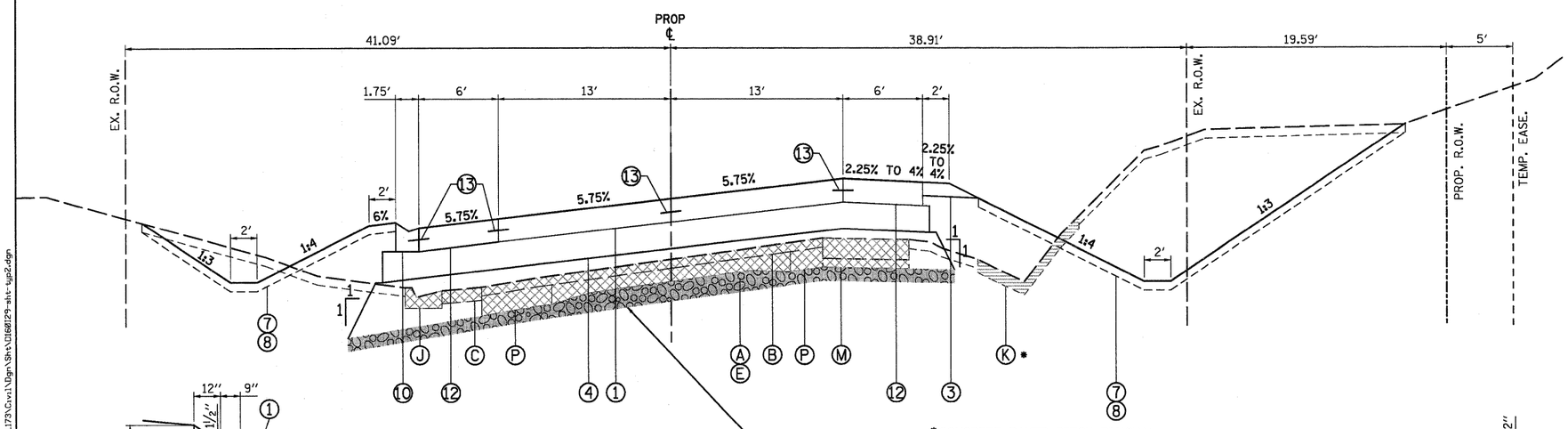

*CONCRETE PAVED DITCH REMOVAL
STA. 445+09.08 TO STA. 446+65.75 (RT.)

ILLINOIS ROUTE 173
STA. 445+21.70 TO STA. 449+53.82 (LT)
STA. 445+09.08 TO STA. 449+53.82 (RT)

ESTIMATED 6" UNDERCUT AREA, FILLED WITH 6" PGE SUBGRADE ON GEOTEXTILE FABRIC
STA. 447+80 TO STA. 449+53.82

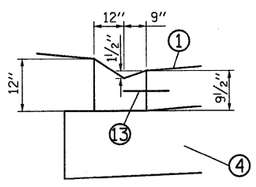

CONCRETE GUTTER, TYPE B (MODIFIED)
STA. 445+43.98 TO STA. 449+53.82 (LT)

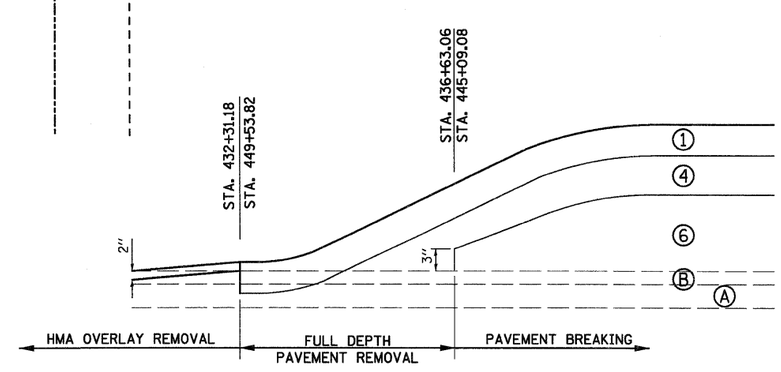

PAVEMENT SECTION TRANSITION DETAIL

LEGEND, EXISTING

- (A) EXISTING PCC PAVEMENT, 9"-6"-9"
- (B) EXISTING HMA OVERLAY, 4"
- (C) EXISTING HMA SHOULDER
- (D) EXISTING AGGREGATE SHOULDER
- (E) EXISTING PAVEMENT STRUCTURE - FULL DEPTH REMOVAL
- (F) EXISTING PAVEMENT STRUCTURE - SURFACE MILLING
- (G) EXISTING PAVEMENT STRUCTURE - PAVEMENT BREAKING
- (H) EXISTING HMA SHOULDER - TO BE REMOVED
- (J) EXISTING AGGREGATE SHOULDER - TO BE REMOVED
- (K) EXISTING CONCRETE PAVED DITCH TO BE REMOVED
- (L) EXISTING CURB AND GUTTER TO BE REMOVED
- (M) TEMPORARY PAVEMENT - FULL DEPTH REMOVAL
- (N) TEMPORARY PAVEMENT - SURFACE MILLING
- (O) TEMPORARY PAVEMENT - PAVEMENT BREAKING
- (P) EXISTING HMA WIDENING, 9"

LEGEND, PROPOSED

- (1) PCC PAVEMENT, 9½" (JOINTED)
- (2) 2" HMA SURFACE COURSE, MIX "D", N50
- (3) AGGREGATE SHOULDER, TYPE B, 6"
- (4) AGGREGATE SUBGRADE (12")
- (5) HOT-MIX ASPHALT SHOULDERS, 8½"
- (6) AGGREGATE BASE COURSE, TYPE B, 4"
- (7) TOPSOIL FURNISH AND PLACE, 6"
- (8) SEEDING CLASS 2A OR 4A W/ EROSION CONTROL BLANKET
- (9) STEEL PLATE BEAM GUARDRAIL, TYPE A (6' POSTS)
- (10) CONCRETE GUTTER, TYPE B (MODIFIED)
- (11) SAWCUT - FULL DEPTH (INCLUDED IN COST OF WORK ITEM)
- (12) PCC SHOULDER, 9½"
- (13) #6 TIE BARS (INCLUDED IN COST OF PCC PAVEMENT, SHOULDER OR CURB)

FILE NAME = P:\CBBEL WEST Projects\2009\09-0147 IL173\Civil\Dgn\Sht\D160129-sht-typ2.dgn

WILLS BURKE KELSEY ASSOCIATES LTD. 116 West Main Street, Suite 201 St. Charles, Illinois 60174 (630) 443-7755	USER NAME = #USER#	DESIGNED - SBP/KMA	REVISED -	STATE OF ILLINOIS DEPARTMENT OF TRANSPORTATION	TYPICAL SECTIONS	F.A. RTE.	SECTION	COUNTY	TOTAL SHEETS / SHEET NO.
		DRAWN - AH	REVISED -			303	132 B-2	McHENRY	106 / 8
	PLOT SCALE =	CHECKED - PJF	REVISED -					CONTRACT NO.60129	
	PLOT DATE = 1/5/2011	DATE - 12/14/10	REVISED -		SCALE: SHEET NO. 8 OF 106 SHEETS STA. TO STA.	FED. ROAD DIST. NO.	ILLINOIS	FED. AID PROJECT	