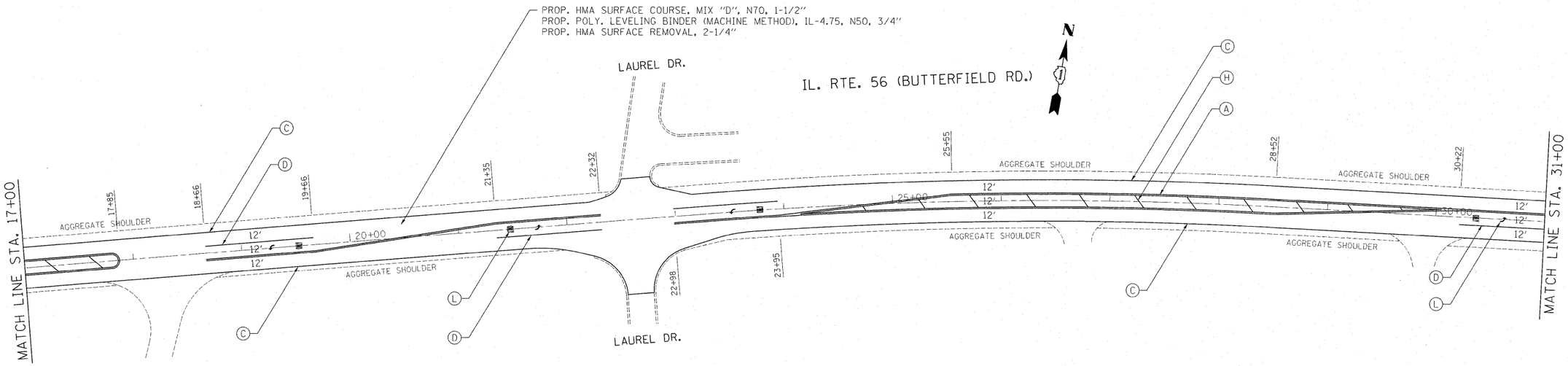

PAVEMENT MARKING KEY NOTE LEGEND:

- (A) PROP. THERMO. PVT. MARKING (YELLOW) - 4"
  SOLID CENTERLINE (2 LINES @ 11" C-C) - (TYP.)
- (B) PROP. THERMO. PVT. MARKING (YELLOW) - 4"
  SKIP-DASH CENTERLINE (10' LINE - 30' SPACE) - (TYP.)
- (B1) PROP. THERMO. PVT. MARKING (YELLOW) - 4"
  SOLID NO PASSING ZONE LINE (5-1/2" C-C FROM SKIP-DASH) - (TYP.)
- (C) PROP. THERMO. PVT. MARKING (WHITE) - 4"
  SOLID EDGELINE - (TYP.)
- (D) PROP. THERMO. PVT. MARKING (WHITE) - 6"
  SOLID TURN LANE LINE - (TYP.)
- (E) PROP. THERMO. PVT. MARKING (WHITE) - 6"
  SKIP-DASH TURN LANE LINE (2' LINE - 6' SPACE) - (TYP.)
- (F) PROP. THERMO. PVT. MARKING (WHITE) - 6"
  SOLID PEDESTRIAN CROSSWALK - (TYP.)
- (G) PROP. THERMO. PVT. MARKING (WHITE) - 8"
  SOLID CHANNELIZATION LINE - (TYP.)
- (H) PROP. THERMO. PVT. MARKING (YELLOW) - 12"
  SOLID PAINTED MEDIAN DIAGONAL LINE - RT. 45° DIAGONAL @ 75' C-C - (TYP.)
- (I) PROP. THERMO. PVT. MARKING (YELLOW) - 12"
  SOLID PAINTED MEDIAN DIAGONAL LINE - RT. 45° DIAGONAL @ 20' C-C - (TYP.)
- (J) PROP. THERMO. PVT. MARKING (WHITE) - 12"
  SOLID SHOULDER DIAGONAL LINE - RT. 45° DIAGONAL @ 20' C-C - (TYP.)
- (K) PROP. THERMO. PVT. MARKING (WHITE) - 24"
  SOLID STOP BAR - (TYP.)
- (L) PROP. THERMO. PVT. MARKING (WHITE)
  LETTERS AND SYMBOLS - (TYP.)

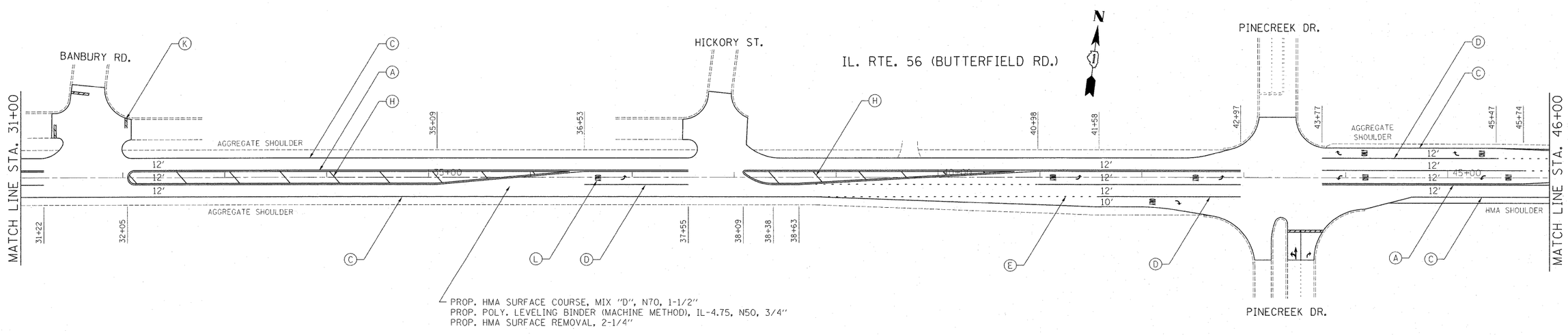

Rev.: 3/16/2011

FILE NAME = c:\pw_work\pwidot\beckertom\d0244424\D160610-sht-plan.dgn	USER NAME = beckertom	DESIGNED -	REVISED 3/16/2011	STATE OF ILLINOIS DEPARTMENT OF TRANSPORTATION	IL RTE. 56 (BUTTERFIELD RD.) LOCATION 1 (IL RTE. 25 TO MITCHELL RD.) ROADWAY AND PAVEMENT MARKING PLAN
		DRAWN -	REVISED -		
	PLOT SCALE = 50.0000 ' / IN.	CHECKED -	REVISED -		
	PLOT DATE = 3/14/2011	DATE -	REVISED -		SCALE: SHEET NO. OF SHEETS STA. TO STA.

F.A.P. RTE.	SECTION	COUNTY	TOTAL SHEETS	SHEET NO.
365	60 RS-3	KANE	23	7
		CONTRACT NO. 60K81		
FED. ROAD DIST. NO. 1	ILLINOIS	FED. AID PROJECT		