MCHENRY COUNTY
DIVISION OF TRANSPORTATION

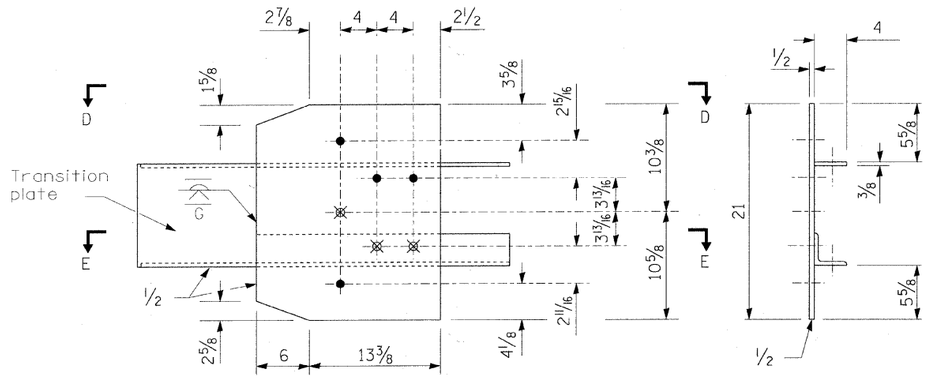

GUARDRAIL CONNECTION PLATE ASSEMBLY DETAILS

(Mirror for opposite end)

● ℄ 4-1 holes for 7/8 H.S. bolts and nuts

⊠ Drill and tap 3 holes for 7/8 H.S. bolts.

LEGEND

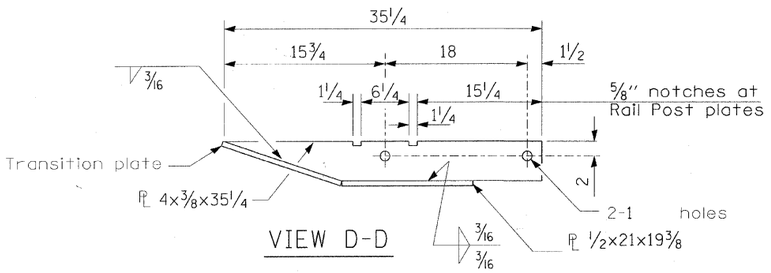

VIEW D-D

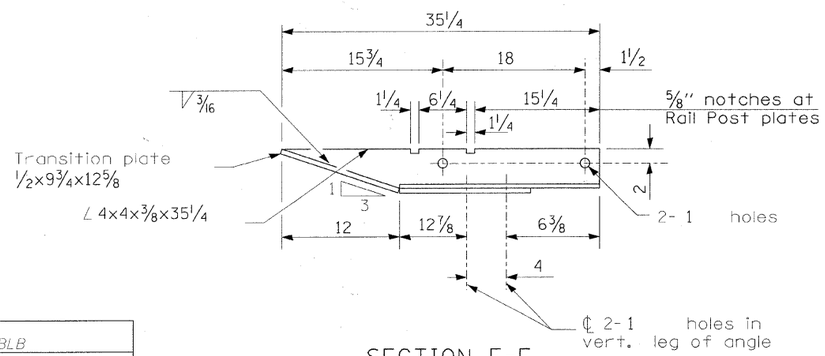

SECTION E-E

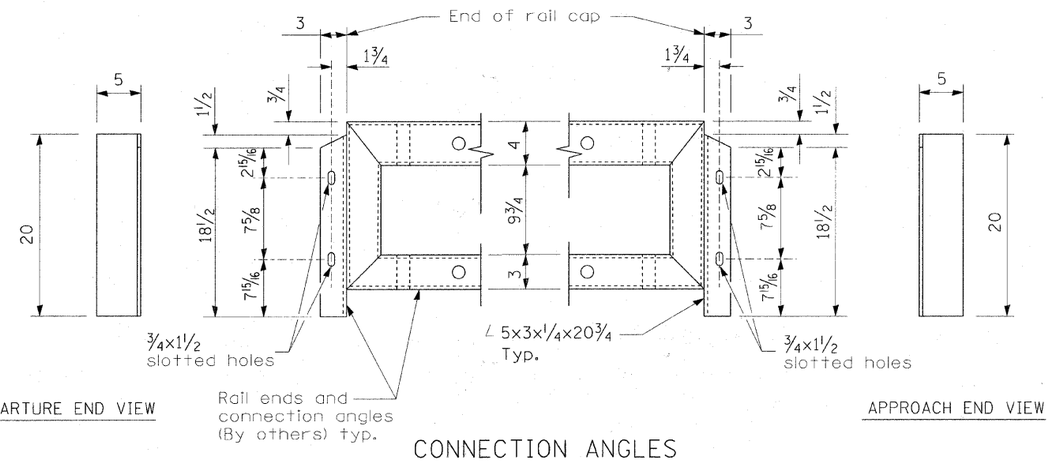

DEPARTURE END VIEW

APPROACH END VIEW

CONNECTION ANGLES

DESIGNED	BLB
CHECKED	AS
DRAWN	BCD
CHECKED	BLB

TRAFFIC BARRIER TERMINAL
TYPE 6A (SPECIAL)
STRUCTURE NO. 056-3181

SHEET NO. 3	F.A.S. RTE.	SECTION	COUNTY	TOTAL SHEETS	SHEET NO.
3 SHEETS	0028	06-00320-01-BR	MCHENRY	70	52
			CONTRACT NO. 63535		
	JOB NO. C-91-139-11	ILLINOIS	FED. AID PROJECT BRS-0028(107)		