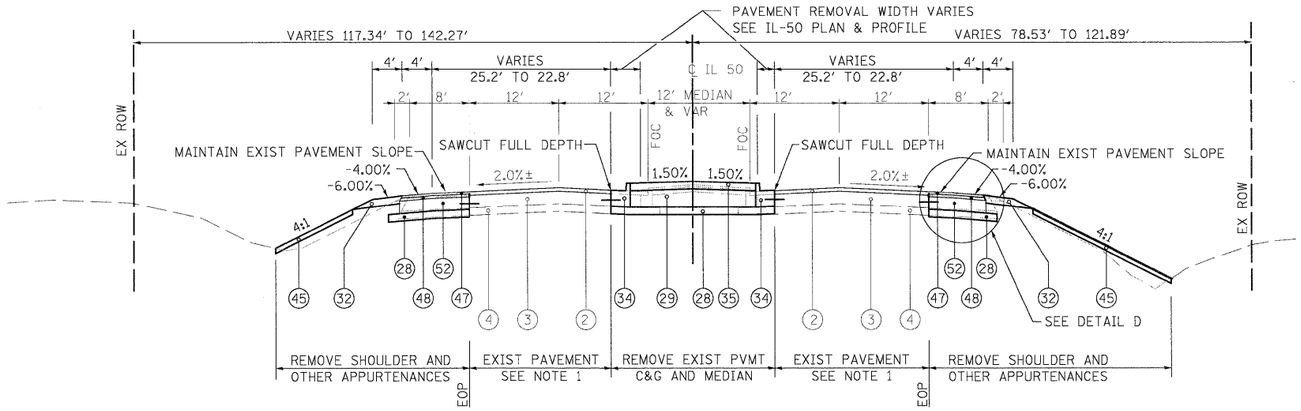

NOTE 1:
MILL 2 1/2" OF EXISTING PAVEMENT OVERLAY
REPLACE WITH POLYMERIZED HMA SURF. CRS., MIX "E", N90, 1 3/4"
AND POLYMERIZED LEVELING BINDER (MACHINE METHOD), N90, 3/4"

IL-50 PAVEMENT WIDENING TYPICAL SECTION
STA 1292+00.00 TO STA 1297+43.00
STA. 1324+77.33 TO STA. 1328+25.00 (SEE NOTE 1)

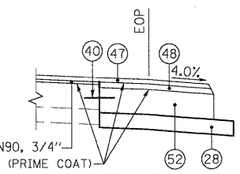

DETAIL D

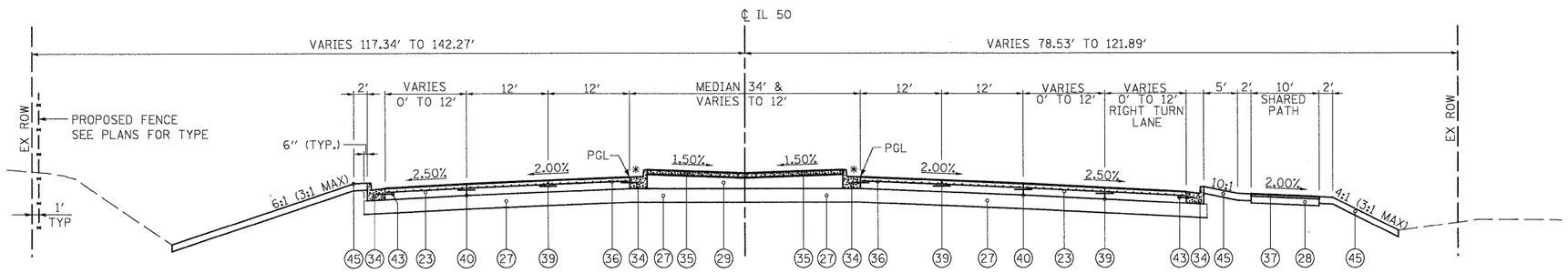

IL-50 PROPOSED TYPICAL SECTION
STA. 1297+43.00 TO STA. 1307+59.00
STA. 1315+35.00 TO STA. 1324+77.33

*GUTTER SLOPE SHALL MATCH ADJACENT PAVEMENT SLOPE

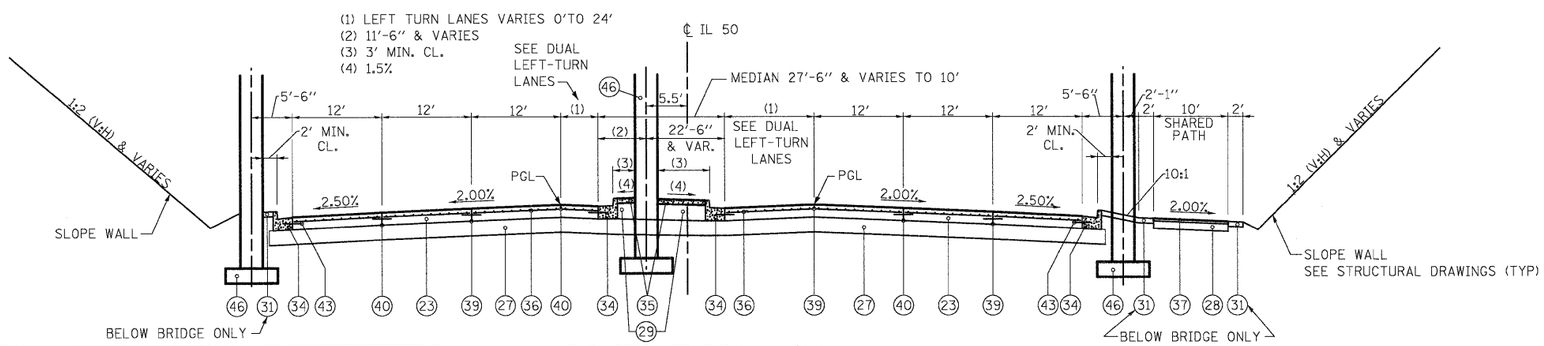

IL-50 PROPOSED TYPICAL SECTION
STA. 1307+59.00 TO STA. 1315+35.00
BRIDGE PIER: STA. 1310+66.37 TO STA. 1312+44.85

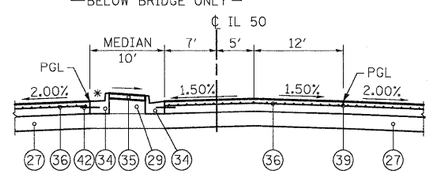

IL-50 PROPOSED TYPICAL SECTION
DUAL LEFT-TURN LANES

STRUCTURAL DESIGN TRAFFIC: YEAR 2025
PV= 94.2% SU = 2.9% MU = 2.9%
ROAD/STREET CLASSIFICATION: URBAN OTHER PRINCIPAL ARTERIAL
PERCENT OF STRUCTURAL DESIGN TRAFFIC IN DESIGN LANE:
P = 8 S = 37 M = 37
TRAFFIC FACTOR: ACTUAL TF = 9.71 AC TYPE = AC-20
MINIMUM TF = 4.96
PG GRADE: BINDER= SBS PG70-22 SURFACE= SBS PG70-22
SUBGRADE SUPPORT RATING: POOR

LEGEND - EXISTING

1. BITUMINOUS OVERLAY, (VARIES) 7" TO 7 1/4"
2. BITUMINOUS OVERLAY, (VARIES) 3" TO 3 5/8"
3. P.C.C. PAVEMENT, 10"
4. SUB-BASE GRANULAR MATERIAL, 6"
5. SUB-BASE GRANULAR MATERIAL, 4"
6. BITUMINOUS SHOULDER, (VARIES) 10" TO 11 1/4"
7. BITUMINOUS SHOULDER, 8 3/4"
8. BITUMINOUS SHOULDER, 7"
9. CAM SHOULDER, 10"
10. CAM SHOULDER, 6"
11. AGGREGATE SHOULDER
12. TYPE B-6.12 CURB & GUTTER
13. BITUMINOUS CONCRETE SURFACE COURSE, 1 1/2"
14. EXISTING GROUND
15. BRIDGE PIER
16. CONCRETE DITCH
17. SUBSURFACE DRAINAGE SYSTEM
18. DRAINAGE DITCH
19. CONCRETE SLOPE WALL

LEGEND - PROPOSED

21. CONTINUOUSLY REINFORCED CONCRETE PAVEMENT, 12 1/4"
22. PORTLAND CEMENT CONCRETE SHOULDERS, 12 1/4"
23. PORTLAND CEMENT CONCRETE PAVEMENT (JOINTED), 10"
24. PORTLAND CEMENT CONCRETE SHOULDERS, 10"
25. PAVEMENT REINFORCEMENT
26. STABILIZED SUBBASE - HMA, 4"
27. SUBBASE GRANULAR MATERIAL, TYPE A, 12"
28. SUBBASE GRANULAR MATERIAL, TYPE A, 6"
29. SUBBASE GRANULAR MATERIAL, TYPE C
30. AGGREGATE SHOULDER, TYPE B, 12"
31. AGGREGATE SHOULDER, TYPE B, 4"
32. AGGREGATE SHOULDER, TYPE B, 10"
33. CONCRETE BARRIER, DOUBLE FACE, 42" HEIGHT, AND BASE
34. COMBINATION CONCRETE CURB & GUTTER, TYPE B6.24
35. CONCRETE MEDIAN SURFACE, 4 INCH
36. PAVEMENT FABRIC
37. INCIDENTAL HOT-MIX ASPHALT SURFACING, 2"
38. HOT-MIX ASPHALT PAVEMENT (FULL-DEPTH) 8"
    HMA SURFACE COURSE, MIX "C", N50, 2"
    HMA BINDER, IL-19.0 N50, 6"
39. PAVEMENT TO PAVEMENT (LONGITUDINAL SAWED JOINT)
    #6 TIE BAR (EPOXY COATED) 30" LONG @ 30" C-C
40. PAVEMENT TO PAVEMENT (LONGITUDINAL CONSTRUCTION JOINT)
    #6 TIE BAR (EPOXY COATED) 30" LONG @ 24" C-C (FORM IN PLACE) OR
    #6 TIE BAR (EPOXY COATED) 24" LONG @ 24" C-C (GROUT IN PLACE)
41. PAVEMENT TO SHOULDER (LONGITUDINAL CONSTRUCTION JOINT)
    #6 TIE BAR (EPOXY COATED) 30" LONG @ 24" C-C
42. #6 TIE BAR (EPOXY COATED) 12" LONG @ 30" C-C
43. #6 TIE BAR (EPOXY COATED) 30" LONG @ 24" C-C
44. PIPE UNDERDRAIN, 4" (MODIFIED) - 36" NOMINAL DEPTH
    BELOW BOTTOM OF CONCRETE PAVEMENT OR BASE COURSE
45. TOPSOIL EXCAVATION AND PLACEMENT (4") WITH SEEDING, TY VARIES
46. BRIDGE PIER: SEE STRUCTURAL DRAWINGS FOR DETAILS
47. POLYMERIZED HOT-MIX ASPHALT SURFACE COURSE,
    MIX 'E", N90, 1 3/4"
48. POLYMERIZED HOT-MIX ASPHALT BINDER COURSE,
    IL-19.0, N90, 2 1/4"
49. VARIABLE DEPTH BINDER
    PAID FOR AS HMA BINDER COURSE, IL-19.0, N90
50. HOT-MIX ASPHALT SURFACE COURSE, MIX "D", N90, 1 1/2"
51. HOT-MIX ASPHALT BINDER COURSE, IL-19.0, N90, 2 1/4"
52. PORTLAND CEMENT CONCRETE BASE COURSE, 10"
53. AGGREGATE SUBGRADE 12"

FILE NAME = I:\Dgn\sheets\ts006.dgn	USER NAME = EricG	DESIGNED - JTF	REVISED -	STATE OF ILLINOIS DEPARTMENT OF TRANSPORTATION	PROPOSED TYPICAL SECTIONS				F.A.I RTE.	SECTION	COUNTY	TOTAL SHEETS	SHEET NO.
		DRAWN - JTF	REVISED -						57	(46-2) I, HBR, VBR	KANKAKEE	558	20
	PLOT SCALE = 1:10	CHECKED - EJG	REVISED -								CONTRACT NO. 66409		
	PLOT DATE = 12/22/2010	DATE - 12/17/10	REVISED -		SCALE:	SHEET NO. OF SHEETS	STA.	TO STA.	FED. ROAD DIST. NO. 3	ILLINOIS	FED. AID PROJECT		