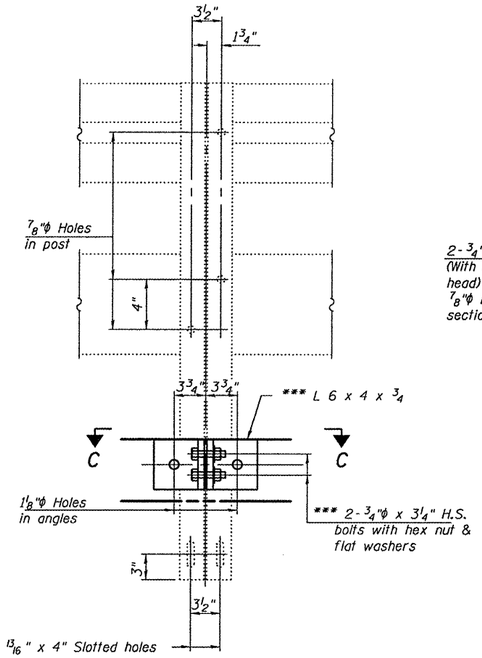

SECTION B-B

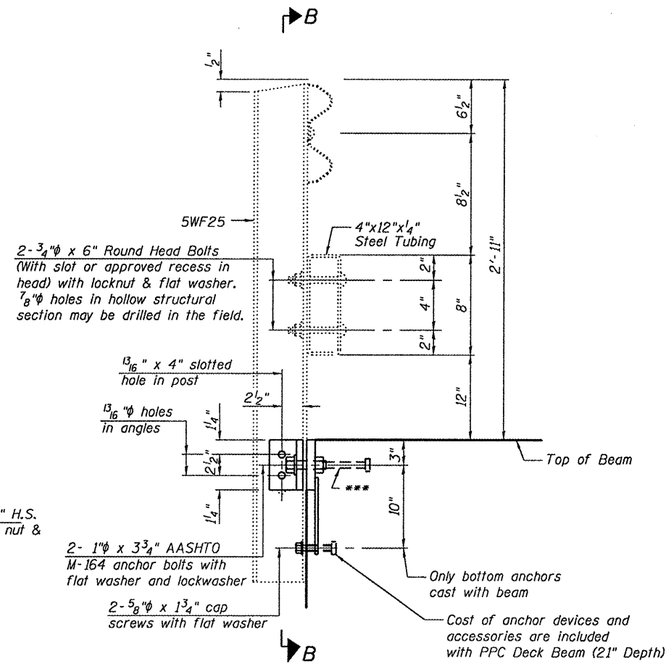

SECTION AT RAIL POST

*** Cost included with Removing and Re-Erecting Existing Railing.

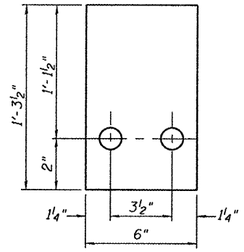

¼" SHIM PL

Notes:

All field drilled holes shall be coated with an approved zinc rich paint before erection.

For multi-span bridges, sufficient ¼" x 6" x 1'-2" galvanized steel shims shall be provided to align rail between adjacent spans. Cost included with with PPC Deck Beam (21" Depth).

All steel rail members shall be galvanized according to Article 509.05 of the Standard Specifications.

*** The studs of the anchor devices shall be placed below the top reinforcement bars and the outermost longitudinal reinforcement bar shall be placed directly above the studs of the rail post anchor device.

The cost of all labor and materials for removing, storing and reinstalling the existing posts and railing is included in the cost per foot for Removing and Re-Erecting Existing Railing.

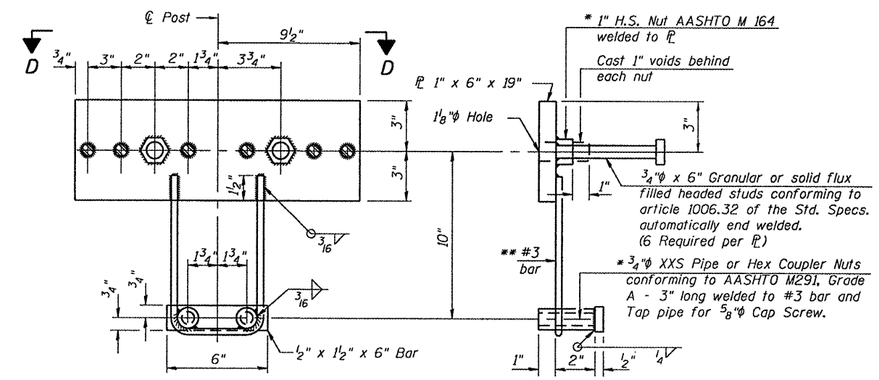

ANCHOR DEVICE

* Threaded areas shall be plugged or blocked off during casting of beam. Galvanized after fabrication.

** Whenever the lower insert assemblies interfere with strand locations, the #3 bars shall be adjusted in order to allow raising or lowering of the lower inserts. Maximum adjustment not to exceed ½".

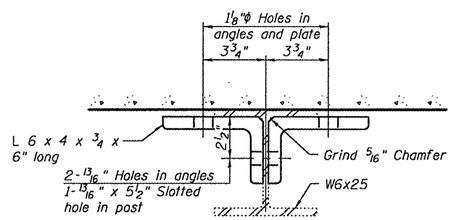

SECTION C-C

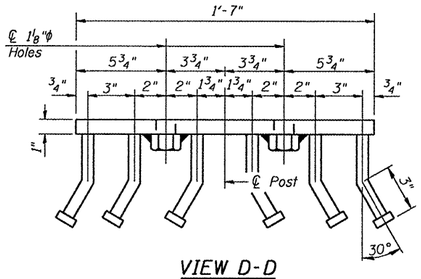

VIEW D-D

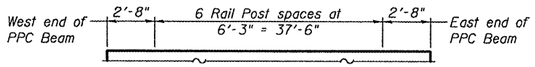

EXISTING RAIL POST SPACING

DESIGNED - V.H.V.	EXAMINED	ACTING ENGINEER OF STRUCTURAL SERVICES	DATE - MARCH 14, 2011	STATE OF ILLINOIS DEPARTMENT OF TRANSPORTATION	RAIL DETAILS SN 036-0003	F.A. RTE.	SECTION	COUNTY	TOTAL SHEETS / SHEET NO.
CHECKED - I.J.L.						45	(6BR)I	Henderson	9 / 8D
DRAWN - Drew Christopher	PASSED	ACTING ENGINEER OF BRIDGES AND STRUCTURES			SHEET NO. 4 OF 4 SHEETS			CONTRACT NO. 68A17	
CHECKED - V.H.V. I.J.L.								ILLINOIS FED. AID PROJECT	

0360003.dgn 3/14/2011 2:30:43 PM