STATE OF ILLINOIS
DEPARTMENT OF TRANSPORTATION

| ROUTE NO. | SECTION | COUNTY | TOTAL SHEETS | SHEET NO. |
|---|---|---|---|---|
| F.A.P. 314 | 64-1VBR | ST CLAIR | 23 | 22 |
| FED. ROAD DIST. NO. 7 | ILLINOIS | FED. AID PROJECT- | | |

SHEET NO. 18
18 SHEETS

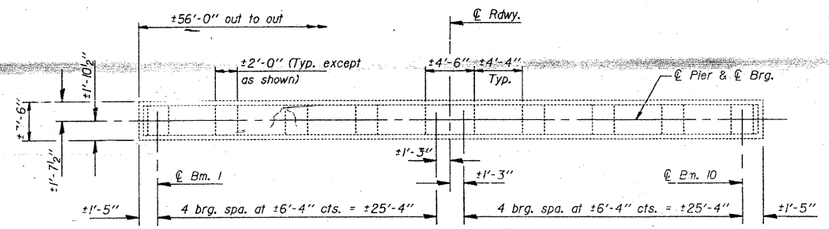


TOP PLAN

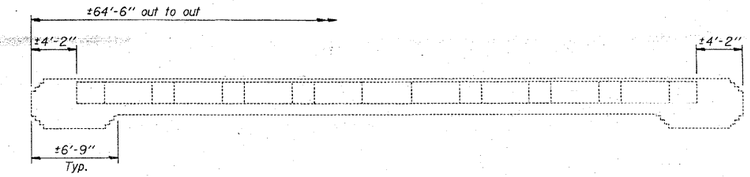


TOP PLAN

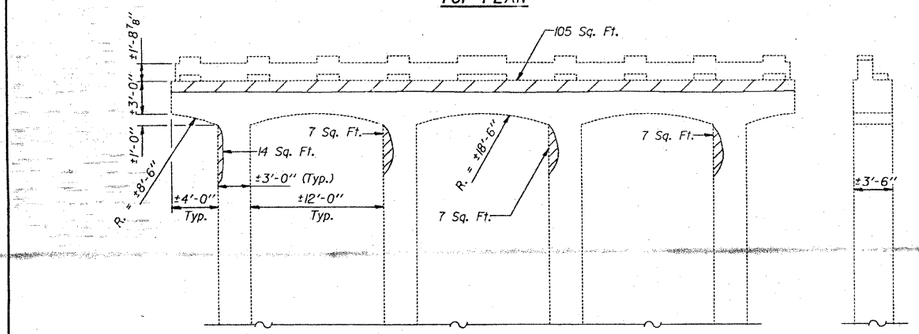


ELEVATION-PIER 3
(Looking North)

END VIEW

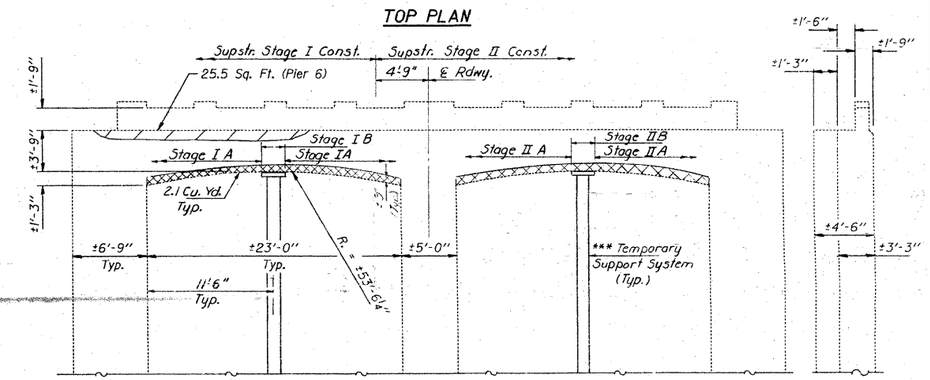


ELEVATION-PIER 6 & PIER 7
(Looking North)

END VIEW

Repair Concrete Structures
Concrete Removal

Note: Remove ±9" of deteriorated concrete from bottom of caps at Piers 6 and 7. Clean exposed reinforcement bars and pour new Class X Concrete.
Stage IA and IB are to be done during superstructure Stage I Construction. IA to be done first and IB to be done second.
Stage IIA and IIB are to be done during superstructure Stage II Construction. IIA to be done first and IIB to be done second.

*** To be in place prior to undertaking any concrete removal. The Temporary Support System shall be designed by the Contractor and the drawings submitted to the Engineer for approval. The Contractor may submit an alternate procedure to provide temporary support for the pier caps.

Temporary Support System shall be removed prior to Stage IB & Stage IIB Construction.

| | |
|---|---|
| DESIGNED | Dennis Bolin |
| CHECKED | David Murphy |
| DRAWN | R. Doty |
| CHECKED | DG |

Feb. 4 1985
EXAMINED James T. Pulsun — ENGINEER OF BRIDGE DESIGN
PASSED James T. Pulsun — ENGINEER OF BRIDGE AND STRUCTURES
APPROVED — DIRECTOR OF HIGHWAYS

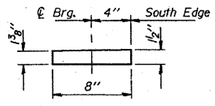


DETAIL "A"

Existing 1½" x 8" x 10½" plate to be removed. No Salvage. New 1½" x 8" x 10½" tapered ℙ (Typ. all beams) See Detail "A".

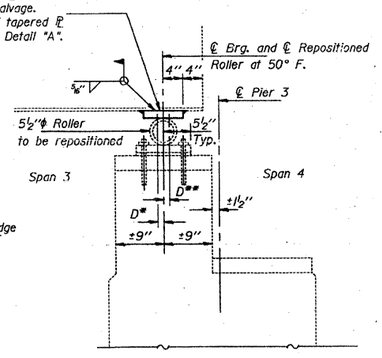


SECTION THRU PIER 3
(Showing bearing plate removal and replacement in Span 3)

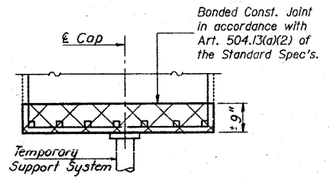


DETAIL "B"

Notes on Repositioning of Rollers:
D* (Side of brg. toward fixed brg.)
D* = 1/16" per 100' of expansion for every 15° fall below the normal temperature of 50° F.

D** (Side of brg. away from fixed brg.)
D** = 1/16" per 100' of expansion for every 15° rise above the normal temperature of 50° F.

Notes:
Procedure for Repositioning Bearings:
1. Apply jacking force to raise the beam ends to a maximum of ⅛". ℙ reaction per beam = 18.5 K.
2. Remove existing top bearing plate.
3. Reposition roller and rotate 90°.
4. Install new top bearing plate and center over bottom bearing plate.
5. Remove jacking force.

Note:
Bearings are to be repositioned prior to longitudinal joint reconstruction. See sheet #2 for staging.

BILL OF MATERIAL

| Item | Unit | Total |
|---|---|---|
| Repair Concrete Structures | Sq. Ft. | 165 |
| Jack and Reposition Bearings | Each | 10 |
| Structural Steel | Lbs. | 360 |
| Class X Concrete | Cu. Yd. | 8.4 |
| Concrete Removal | Cu. Yd. | 8.4 |
| Temporary Support System | L. Sum | 1 |

PIER REPAIR DETAILS
F.A. RT. 14 SEC. 64-NBI
ST. CLAIR COUNTY
STA. 281+07.13

FOR INFORMATION ONLY

Coombe-Bloxdorf P.C.
-CIVIL ENGINEERS-
-STRUCTURAL ENGINEERS-
-LAND SURVEYORS-
Design Firm License No. 184-002703

| | | | |
|---|---|---|---|
| FILE NAME = ...\159-D876882-exist-bridge-repair-plans-29.dgn | USER NAME = CFC.. | DESIGNED - | REVISED - |
| | | DRAWN - | REVISED - |
| | PLOT SCALE = 40.000000 ' / IN. | CHECKED - | REVISED - |
| CB JOB NO 09021 | PLOT DATE = 8/5/2010 | DATE - / / | REVISED - |

STATE OF ILLINOIS
DEPARTMENT OF TRANSPORTATION

SN 082-0030 PLANS
(REHABILITATION PLANS)

SCALE: | SHEET NO. OF SHEETS | STA. TO STA.

| F.A.P. RTE. | SECTION | COUNTY | TOTAL SHEETS | SHEET NO. |
|---|---|---|---|---|
| 312 | 64-1VBR | ST. CLAIR | 259 | 159 |
| | | CONTRACT NO. 76882 | | |
| | | ILLINOIS FED. AID PROJECT | | |