DETAIL OF PRECAST CONCRETE BOX CULVERT SECTION

(WITH COVER 2 FEET OR GREATER - AASHTO DESIGNATION M259)
DESIGN LOADING: HS-20-44

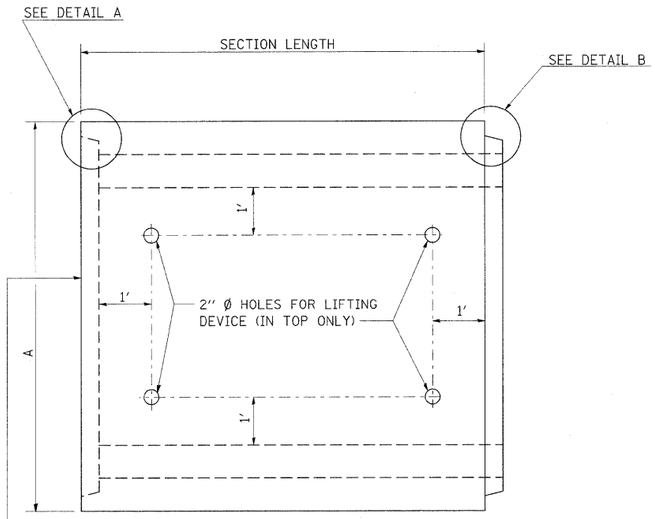

PLAN

LOCATION OF LIFTING HOLES MAY BE VARIED AS NEEDED TO CLEAR REINFORCEMENT.

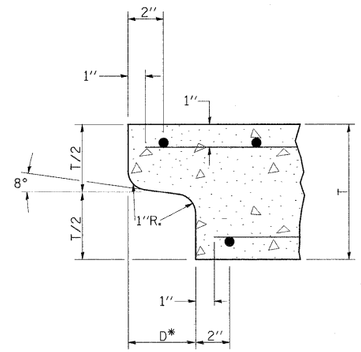

DETAIL A
(TYP. INLET END)

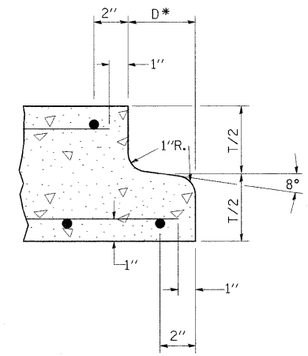

DETAIL B
(TYP. OUTLET END)

NOTE: INLET AND OUTLET ENDS SHALL BE COMPATIBLE.
*THE D DIMENSION SHALL CONFORM TO THE MANUFACTURER'S STANDARDS.

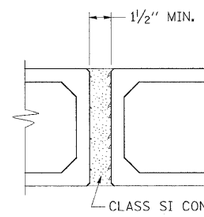

MULTIPLE UNIT PLACEMENT

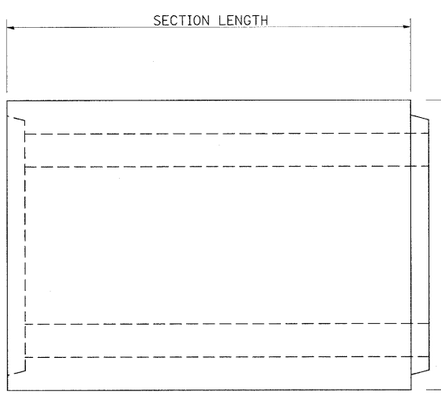

ELEVATION

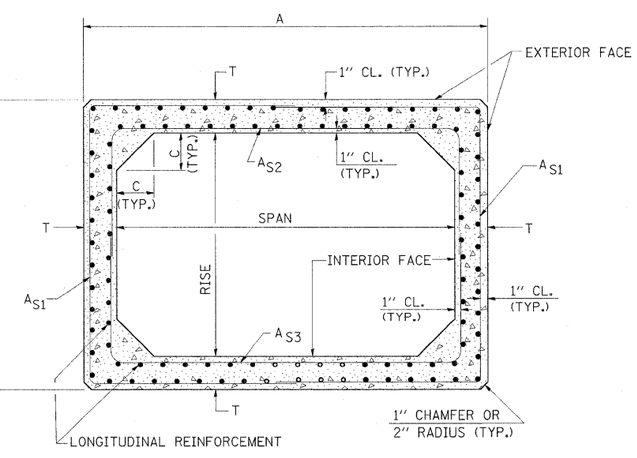

CROSS SECTION

GENERAL NOTES

SHOP PLANS FOR THE REINFORCEMENT SHALL BE SUBMITTED IN ACCORDANCE WITH THE REQUIREMENTS OF ARTICLE 504.04 OF THE STANDARD SPECIFICATIONS.

MINIMUM CONCRETE STRENGTH SHALL BE 5000 PSI AFTER 28 DAYS.

THE JOINTS OF THE PRECAST BOX SECTIONS SHALL BE SEALED WITH MASTIC IN ACCORDANCE WITH ARTICLE 1055.01 OF THE STANDARD SPECIFICATIONS FOR ROAD AND BRIDGE CONSTRUCTION.

LIFTING HOLES SHALL BE FILLED WITH CONCRETE PLUGS AND MASTIC AFTER THE BOX SECTIONS ARE IN PLACE.

THE TERMS AS1, AS2, & AS3 DENOTE THE REQUIRED STEEL AREAS FOR REINFORCEMENT AS SPECIFIED IN AASHTO M259. REINFORCEMENT SHALL BE WELDED WIRE FABRIC CONFORMING TO AASHTO M55-81.

DRAINAGE OPENINGS SHALL BE PROVIDED IN ACCORDANCE WITH ARTICLE 503.11 OF THE STANDARD SPECIFICATIONS. LOCATION AND SPACING OF THE OPENINGS SHALL BE SHOWN ON THE SHOP DRAWINGS.

DIMENSIONS

SPAN X RISE	T (INCHES)	A (FT.-IN.)	B (FT.-IN.)	C (INCHES)
2' X 2'	4	2-8	2-8	4
3' X 2'	4	3-8	2-8	4
3' X 3'	4	3-8	3-8	4
4' X 2'	5	4-10	2-10	5
4' X 3'	5	4-10	3-10	5
4' X 4'	5	4-10	4-10	5
5' X 2'	6	6-0	3-0	6
5' X 3'	6	6-0	4-0	6
5' X 4'	6	6-0	5-0	6
5' X 5'	6	6-0	6-0	6
6' X 2'	7	7-2	3-2	7
6' X 3'	7	7-2	4-2	7
6' X 4'	7	7-2	5-2	7
6' X 5'	7	7-2	6-2	7
6' X 6'	7	7-2	7-2	7
7' X 4'	8	8-4	5-4	8
7' X 5'	8	8-4	6-4	8
7' X 6'	8	8-4	7-4	8
7' X 7'	8	8-4	8-4	8
8' X 4'	8	9-4	5-4	8
8' X 5'	8	9-4	6-4	8
8' X 6'	8	9-4	7-4	8
8' X 7'	8	9-4	8-4	8
8' X 8'	8	9-4	9-4	8

SPAN X RISE	T (INCHES)	A (FT.-IN.)	B (FT.-IN.)	C (INCHES)
9' X 5'	9	10-6	6-6	9
9' X 6'	9	10-6	7-6	9
9' X 7'	9	10-6	8-6	9
9' X 8'	9	10-6	9-6	9
9' X 9'	9	10-6	10-6	9
10' X 5'	10	11-8	6-8	10
10' X 6'	10	11-8	7-8	10
10' X 7'	10	11-8	8-8	10
10' X 8'	10	11-8	9-8	10
10' X 9'	10	11-8	10-8	10
10' X 10'	10	11-8	11-8	10
11' X 4'	11	12-10	5-10	11
11' X 6'	11	12-10	7-10	11
11' X 8'	11	12-10	9-10	11
11' X 10'	11	12-10	11-10	11
11' X 11'	11	12-10	12-10	11
12' X 4'	12	14-0	6-0	12
12' X 6'	12	14-0	8-0	12
12' X 8'	12	14-0	10-0	12
12' X 10'	12	14-0	12-0	12
12' X 12'	12	14-0	14-0	12

REVISIONS

DRAWN	9-7-89
REVISED	3-27-90
REVISED	8-16-94
REVISED	01-10-07
RESIZED	5-6-08

STD. 9-48

FILE NAME = c:\pw_work\pwidot\colemm\d0169788\78172_sht_misc.dgn	USER NAME = colemm	DESIGNED -	REVISED -
		DRAWN -	REVISED -
	PLOT SCALE = 50.0000 ' / IN.	CHECKED -	REVISED -
	PLOT DATE = 2/4/2011	DATE -	REVISED -

STATE OF ILLINOIS
DEPARTMENT OF TRANSPORTATION

DETAIL OF PRECAST CONCRETE BOX CULVERT SECTION

SCALE: | SHEET NO. OF SHEETS | STA. TO STA.

F.A.I. RTE.	SECTION	COUNTY	TOTAL SHEETS	SHEET NO.
57	•	Jefferson	422	159
		CONTRACT NO. 78172		
	ILLINOIS	FED. AID PROJECT		

(41-2-1,41-3,41-3-1)R-1